NAMOH TOOLINGS

WE LISTEN WE INNOVATE

SPADE DRILL CATALOGUE

NAMOH TOOLINGS

WE LISTEN WE INNOVATE

SPADE DRILL

INTRODUCTION

Spade Drill is a modular, high-performance replaceable insert drill introduced by Namoh Toolings. It is designed for use on both traditional machine tools and CNC machine tools. The insert can be replaced directly without the need for regrinding, enabling higher drilling speeds and significantly improving drilling efficiency.

Compared with conventional twist drills, the efficiency is greatly enhanced, making the Spade Drill an ideal choice for improving the quality and productivity of hole machining on both conventional and CNC machines.

The Spade Drill assembly consists of a tool holder and replaceable insert, along with an oil ring system that converts traditional external coolant supply into an internal cooling system, ensuring better heat dissipation and longer tool life.

The tool holder is manufactured from high-strength, heat-resistant alloy steel, which undergoes advanced heat treatment and precision machining to ensure durability and dimensional accuracy.

The inserts are manufactured using powder metallurgy high-speed steel (HSS) and cemented carbide, ensuring superior cutting performance and wear resistance.

Insert Diameter Range: Φ 9.5 mm to Φ 114 mm

Suitable for Machining Materials:

- Steel
- Stainless Steel
- Alloy Steel
- Cast Iron
- Aluminum Alloys
- Other engineering materials

Spade drills from Namoh Toolings provide an efficient, cost-effective solution for high-productivity hole making across a wide range of industrial applications.

NAMOH TOOLINGS

WE LISTEN WE INNOVATE

FEATURES

1. High wear resistant material, top-level coating and precision grinding technology, 50% ~ 200% more efficient than traditional twist drill.
2. The simple and convenient interchangeable insert structure can make inserts replacement on the machine tool directly.
3. With powder high speed steel and cemented carbide two materials, have More widely used.
4. With Morse taper and Lateral fixation type shank, it can be used for both traditional machine tools and CNC machine tools.
5. Only 16 holders can cover inserts ϕ9.5-ϕ114mm.
6. The holder internal cooling design has excellent chip removal performance and cooling effect.

SPADE DRILL SELECTION

The spade drill is composed of a tool holder and insert. The center of the tool holder is designed with internal cooling. One kind of holder can be adapted to several inderts of different specifications to reduce the purchase cost of it. The inserts have two series of imported powder high-speed steel and imported carbide. Please choose the right type according to your working condition.

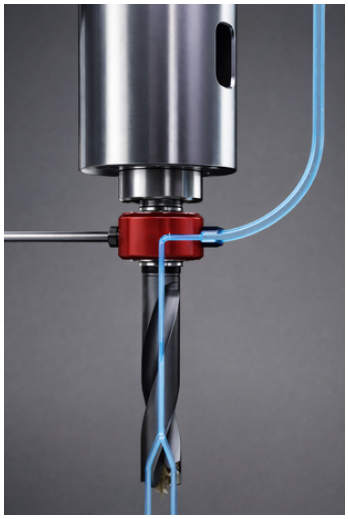

For traditional machine tools, please choose powder high speed steel series.

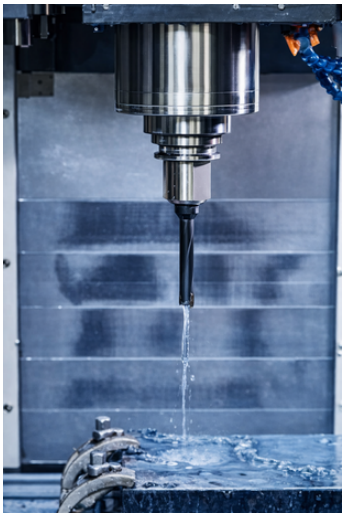

For CNC machines， please select powder high speed steel series for medium and low.

NAMOH TOOLINGS

WE LISTEN WE INNOVATE

INSERT

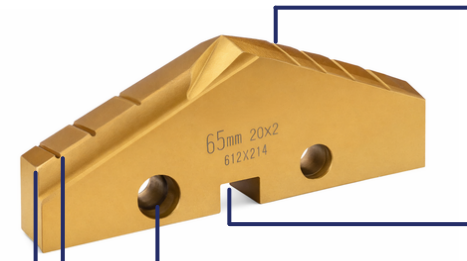

CHIP BREAKER GROOVE
REDUCES CHIP WIDTH, FACILITATES CHIP EVACUATION, AND REDUCES DRILLING TORQUE.

POSITIONING GROOVE
ENSURES RADIAL BALANCE.

POSITIONING GROOVE
ENSURES RADIAL BALANCE.

CHIP-BREAKING GROOVE
BREAKS CHIPS AND FACILITATES EASY CHIP EVACUATION.

CHAMFER
INCREASES INSERT STRENGTH, REDUCES EDGE WEAR, AND IMPROVES WORKPIECE SURFACE FINISH.

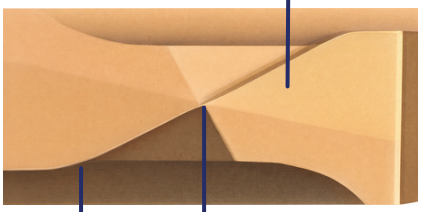

FOUR-FACET CLEARANCE ANGLE
REDUCES FRICTION WITH THE WORKPIECE, PROVIDES GOOD SELF-CENTERING, AND LOWERS AXIAL RESISTANCE.

DRILL CORE
COMPARED WITH CONVENTIONAL DRILL PRODUCTS, THE THINNER DRILL CORE REDUCES AXIAL RESISTANCE BY 20% AND PROVIDES GOOD SELF-CENTERING.

XR-TYPE CHISEL EDGE GRINDING
IMPROVES CUTTING EDGE STRENGTH AND ENHANCES STABILITY.

NAMOH TOOLINGS

WE LISTEN WE INNOVATE

SPADE DRILL HOLDER MODEL INSTRUCTIONS

S G H - 00 - M K 020 - 40N

S	G	H	00			M	K	020	40N
BIG TYPE	SMALL TYPE	FLUTE TYPE	CONNECTOR CODE			METRIC AND INCH	SHANK TYPE	SHANK DIAMETER	LENGTH
			CONNECTOR	METRIC	INCH				
S-spade drill	G-holder	H - helical flute S - straight flute	Y0 Z0 00 05 10 15 20 25 30 35 40 45 50 55 70 80	9.5 ~11.49 11.5~12.97 12.98~15.49 15.5 ~17.85 17.86~21.99 22.0~ 24.6 24.61~29.99 30.0~35.5 35.51~41.99 42.0~47.99 48~55.99 56~63.49 63.5 ~76.99 77.0 ~89.09 89.1~101.6 101.61~114.3	0.374"~0.452" 0.453"~0.511" 0.511"~0.61" 0.61"~0.703" 0.703"~0.866" 0.866"~0.969" 0.969"~1.181" 1.181"~1.398" 1.398"~1.653" 1.654"~1.889" 1.89"~2.204" 2.205"~2.5" 2.5"~3.031" 3.031"~3.507" 3.508"~4" 4"~4.5"	M-metric I-iNCH	K-one flat shank M - morse taper shank	016 - 16mm 020 - 20mm 032 - 32mm 040 - 40mm 075 - 3/4" 063 - 5/8" 125 - 1-1/4" 150 - 1-1/2" MT2 - #2 MT3 - #3 MT4 - #4 MT5 - #5	10N- ultrashort 20N- short series 30N - intermediate 40N - standard 50N - extend length series 60N - lengthening series 70N - extra length series 90N - overlength series

NAMOH TOOLINGS

WE LISTEN WE INNOVATE

SPADE DRILL INSERT MODEL INSTRUCTIONS

S P - 0 - M 0130 - 15 XH

S	P	0			M	0130	15	XH
BIG TYPE	SMALL TYPE	CONNECTOR CODE			METRIC AND INCH	INSERT DIAMETER	MATERIAL	LENGTH
		CONNECTOR	METRIC	INCH				
S-spade drill	P-insert	Y Z 0 1 1 2 3 4 5 6 7 8	9.50 ~11.49 11.50~12.97 12.98~17.85 17.86~24.6 24.61~35.5 35.51~47.99 48.00~65.00 63.5 ~76.99 77.00~89.09 89.1~101.6 101.61~114.3	0.374"~0.452" 0.453"~0.511" 0.511"~0.703" 0.703"~0.969" 0.969"~1.398" 1.398"~1.889" 1.89"~2.559" 2.5"~3.031" 3.031"~3.507" 3.508"~4" 4"~4.5"	M-metric I-iNCH	M0130-13mm I0750-0.75"	10-High speed steel 15-High speed steel with cobalt 25-High speed steel with high cobalt 50-Carbide	XH-Standard drill point VH-Double vertex angle drill point CH-Cast iron drill point SC-Non-ferrous metals drill point

NAMOH TOOLINGS

WE LISTEN WE INNOVATE

SGH-*-MM (HELICAL FLUTE HOLDER WITH TAPER SHANK)

- The inner cooling structure of holder has excellent cooling effect and chip removal performance
- Interchangeable insert structure can make inserts replacement on the machine tool directly.

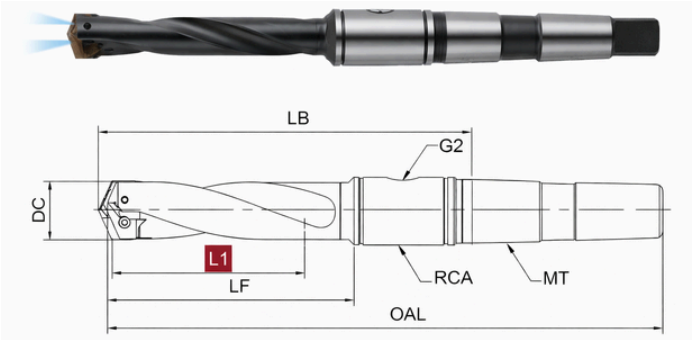

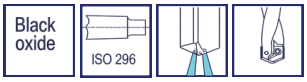

(Unit): mm

TYPE	CONNECTOR	DC	SIZE						ACCESSORIES		
			L1	LF	LB	OAL	MT	G2 inch	RCA		
SGH-Y0-MMMT2-20N	Y0	9.5~11.49 0.374“~0.452“	32	52	88	160	2	Rc1/16	SH-1905R	2102047	2502018
SGH-Y0-MMMT2-40N			60	80	117	189	2	Rc1/16	SH-1905R	2102047	2502018
SGH-Y0-MMMT2-45N			86	106	142	214	2	Rc1/16	SH-1905R	2102047	2502018
SGH-Y0-MMMT2-50N			111	131	167	240	2	Rc1/16	SH-1905R	2102047	2502018
SGH-Z0-MMMT2-20N	Z0	11.50 ~ 12.97 0.453“~0.511”	32	52	88	160	2	Rc1/16	SH-1905R	2102048	2502018
SGH-Z0-MMMT2-40N			60	80	117	189	2	Rc1/16	SH-1905R	2102048	2502018
SGH-Z0-MMMT2-45N			86	106	142	214	2	Rc1/16	SH-1905R	2102048	2502018
SGH-Z0-MMMT2-50N			111	131	167	240	2	Rc1/16	SH-1905R	2102048	2502018
SGH-00-MMMT2-20N	00	12.98 ~ 15.49 0.511"~0.61"	35	56	92	164	2	Rc1/16	SH-1905R	2102230	2502017
SGH-00-MMMT2-40N			64	84	121	193	2	Rc1/16	SH-1905R	2102230	2502017
SGH-00-MMMT2-45N			89	110	146	218	2	Rc1/16	SH-1905R	2102230	2502017
SGH-00-MMMT2-50N			114	135	172	244	2	Rc1/16	SH-1905R	2102230	2502017
SGH-00-MMMT2-60N			178	199	235	307	2	Rc1/16	SH-1905R	2102230	2502017
SGH-05-MMMT2-20N	05	15.50 ~ 17.85 0.61"~0.703“	35	56	92	164	2	Rc1/16	SH-1905R	2102046	2502017
SGH-05-MMMT2-40N			64	84	121	193	2	Rc1/16	SH-1905R	2102046	2502017
SGH-05-MMMT2-45N			89	110	146	218	2	Rc1/16	SH-1905R	2102046	2502017
SGH-05-MMMT2-50N			114	135	172	244	2	Rc1/16	SH-1905R	2102046	2502017
SGH-05-MMMT2-60N			178	199	235	307	2	Rc1/16	SH-1905R	2102046	2502017

NAMOH TOOLINGS

WE LISTEN WE INNOVATE

SGH-*-MM (HELICAL FLUTE HOLDER WITH TAPER SHANK)

- The inner cooling structure of holder has excellent cooling effect and chip removal performance.
- Interchangeable insert structure can make inserts replacement on the machine tool directly.

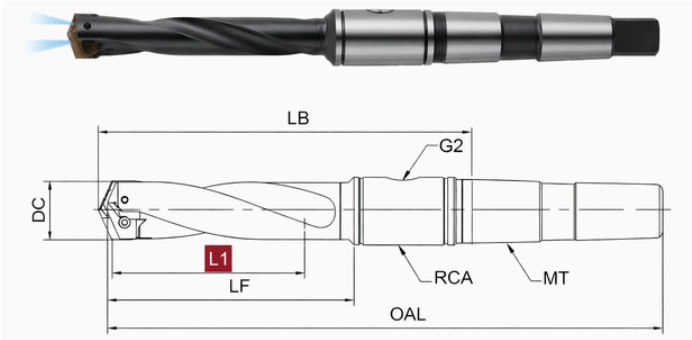

Black oxide | ISO 296

(Unit): mm

TYPE	CONNECTOR	DC	SIZE						ACCESSORIES		
			L1	LF	LB	OAL	MT	G2 inch	RCA		
SGH-10-MMMT3-20N	10	17.86 ~ 21.99 0.703"~0.866"	70	98	143	233	3	Rc1/8	SH-2540R	2102049	2502016
SGH-10-MMMT3-30N			121	149	193	283	3	Rc1/8	SH-2540R	2102049	2502016
SGH-10-MMMT3-40N			172	200	244	334	3	Rc1/8	SH-2540R	2102049	2502016
SGH-10-MMMT3-45N			219	251	295	385	3	Rc1/8	SH-2540R	2102049	2502016
SGH-10-MMMT3-50N			273	302	346	436	3	Rc1/8	SH-2540R	2102049	2502016
SGH-10-MMMT3-60N			363	395	439	529	3	Rc1/8	SH-2540R	2102049	2502016
SGH-15-MMMT3-20N	15	22.00 ~ 24.60 0.866"~0.969"	70	98	142	232	3	Rc1/8	SH-2540R	2102049	2502016
SGH-15-MMMT3-30N			121	149	193	283	3	Rc1/8	SH-2540R	2102049	2502016
SGH-15-MMMT3-40N			172	100	244	334	3	Rc1/8	SH-2540R	2102049	2502016
SGH-15-MMMT3-45N			219	251	295	385	3	Rc1/8	SH-2540R	2102049	2502016
SGH-15-MMMT3-50N			273	302	346	436	3	Rc1/8	SH-2540R	2102049	2502016
SGH-15-MMMT3-60N			363	395	439	529	3	Rc1/8	SH-2540R	2102049	2502016
SGH-20-MMMT4-20N	20	24.61 ~ 29.99 0.969"~1.181"	86	114	160	274	4	Rc1/8	SH-2540R	2102045	2502020
SGH-20-MMMT4-30N			137	165	211	325	4	Rc1/8	SH-2540R	2102045	2502020
SGH-20-MMMT4-40N			187	216	262	375	4	Rc1/8	SH-2540R	2102045	2502020
SGH-20-MMMT4-45N			238	267	313	426	4	Rc1/8	SH-2540R	2102045	2502020
SGH-20-MMMT4-50N			289	318	364	477	4	Rc1/8	SH-2540R	2102045	2502020
SGH-20-MMMT4-60N			400	429	475	588	4	Rc1/8	SH-2540R	2102045	2502020

NAMOH TOOLINGS

WE LISTEN WE INNOVATE

SGH-*-MM (HELICAL FLUTE HOLDER WITH TAPER SHANK)

- The inner cooling structure of holder has excellent cooling effect and chip removal performance.
- Interchangeable insert structure can make inserts replacement on the machine tool directly.

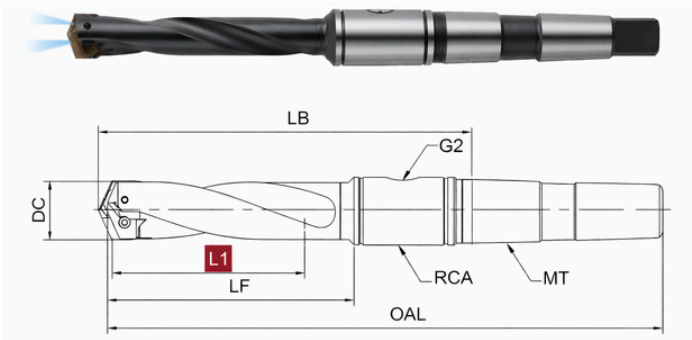

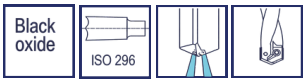

(Unit): mm

TYPE	CONNECTOR	DC	SIZE						ACCESSORIES		
			L1	LF	LB	OAL	MT	G2 inch	RCA		
SGH-25-MMMT4-20N	25	30.00 ~ 35.50 1.181"~1.398“	86	114	168	281	4	Rc1/4	SH-3175R	2102045	2502020
SGH-25-MMMT4-30N			137	165	218	332	4	Rc1/4	SH-3175R	2102045	2502020
SGH-25-MMMT4-40N			187	216	269	383	4	Rc1/4	SH-3175R	2102045	2502020
SGH-25-MMMT4-45N			238	267	320	433	4	Rc1/4	SH-3175R	2102045	2502020
SGH-25-MMMT4-50N			289	318	371	484	4	Rc1/4	SH-3175R	2102045	2502020
SGH-25-MMMT4-60N			400	429	482	595	4	Rc1/4	SH-3175R	2102045	2502020
SGH-30-MMMT4-20N	30	35.51 ~ 41.99 1.398”~1.653“	121	114	206	319	4	Rc1/4	SH-3175R	2102044	2502015
SGH-30-MMMT4-30N			165	165	251	364	4	Rc1/4	SH-3175R	2102044	2502015
SGH-30-MMMT4-40N			210	216	295	408	4	Rc1/4	SH-3175R	2102044	2502015
SGH-30-MMMT4-45N			260	267	346	459	4	Rc1/4	SH-3175R	2102044	2502015
SGH-30-MMMT4-50N			349	318	435	548	4	Rc1/4	SH-3175R	2102044	2502015
SGH-30-MMMT4-70N			559	429	644	757	4	Rc1/4	SH-3175R	2102044	2502015
SGH-35-MMMT4-20N	35	42.00 ~ 47.99 1.654"~1.899”	121	152	206	319	4	Rc1/4	SH-3175R	2102044	2502015
SGH-35-MMMT4-30N			165	197	251	364	4	Rc1/4	SH-3175R	2102044	2502015
SGH-35-MMMT4-40N			210	241	295	408	4	Rc1/4	SH-3175R	2102044	2502015
SGH-35-MMMT4-45N			260	292	346	459	4	Rc1/4	SH-3175R	2102044	2502015
SGH-35-MMMT4-50N			349	381	435	548	4	Rc1/4	SH-3175R	2102044	2502015
SGH-35-MMMT4-70N			559	590	644	757	4	Rc1/4	SH-3175R	2102044	2502015
SGH-40-MMMT5-20N	40	48.00 ~ 55.99 1.89"- 2.204"	130	165	219	364	5	Rc1/4	SH-4445R	2102044	2502015
SGH-40-MMMT5-40N			232	267	321	465	5	Rc1/4	SH-4445R	2102044	2502015
SGH-40-MMMT5-45N			350	385	445	589	5	Rc1/4	SH-4445R	2102044	2502015
SGH-40-MMMT5-50N			422	457	511	656	5	Rc1/4	SH-4445R	2102044	2502015
SGH-40-MMMT5-70N			625	660	714	859	5	Rc1/4	SH-4445R	2102044	2502015

NAMOH TOOLINGS

WE LISTEN WE INNOVATE

SGH-*-MM (HELICAL FLUTE HOLDER WITH TAPER SHANK)

- The inner cooling structure of holder has excellent cooling effect and chip removal performance
- Interchangeable insert structure can make inserts replacement on the machine tool directly.

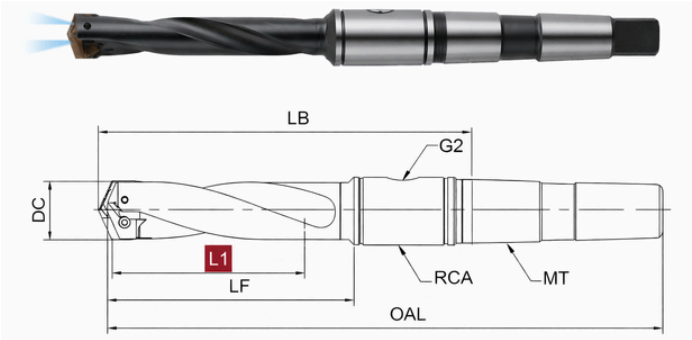

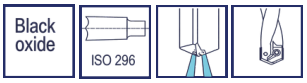

(Unit): mm

TYPE	CONNECTOR	DC	SIZE						ACCESSORIES		
			L1	LF	LB	OAL	MT	G2 inch	RCA		
SGH-45-MMMT5-20N	45	56.00 ~ 65.09 2.205"-2.563"	130	165	219	364	5	Rc1/4	SH-4445R	2102044	2502015
SGH-45-MMMT5-40N			232	267	321	465	5	Rc1/4	SH-4445R	2102044	2502015
SGH-45-MMMT5-45N			350	385	445	589	5	Rc1/4	SH-4445R	2102044	2502015
SGH-45-MMMT5-50N			422	457	511	656	5	Rc1/4	SH-4445R	2102044	2502015
SGH-45-MMMT5-70N			625	660	714	859	5	Rc1/4	SH-4445R	2102044	2502015
SGH-50-MMMT5-20N	50	63.50 ~ 76.99 2.5”~3.031”	172	216	287	430	5	Rc1/2	SH-5715R	2102043	2502019
SGH-50-MMMT5-40N			273	318	289	532	5	Rc1/2	SH-5715R	2102043	2502019
SGH-50-MMMT5-50N			464	508	579	722	5	Rc1/2	SH-5715R	2102043	2502019
SGH-55-MMMT5-20N	55	77.00 ~ 89.09 3.031"~3.507"	172	216	287	430	5	Rc1/2	SH-5715R	2102043	2502019
SGH-55-MMMT5-40N			273	318	389	532	5	Rc1/2	SH-5715R	2102043	2502019
SGH-55-MMMT5-45N			368	413	484	627	5	Rc1/2	SH-5715R	2102043	2502019
SGH-55-MMMT5-50N			464	508	579	722	5	Rc1/2	SH-5715R	2102043	2502019
SGH-70-MMMT5-20N	70	89.10 ~ 101.60 3.508"~4”	172	225	297	440	5	Rc1/2	SH-5715R	2102043	2502019
SGH-70-MMMT5-40N			273	327	399	541	5	Rc1/2	SH-5715R	2102043	2502019
SGH-70-MMMT5-45N			414	469	540	683	5	Rc1/2	SH-5715R	2102043	2502019
SGH-70-MMMT5-50N			556	610	681	824	5	Rc1/2	SH-5715R	2102043	2502019
SGH-80-MMMT5-20N	80	101.61 ~ 114.30 4"~4.5"	172	225	297	440	5	Rc1/2	SH-5715R	2102043	2502019
SGH-80-MMMT5-40N			273	327	399	541	5	Rc1/2	SH-5715R	2102043	2502019
SGH-80-MMMT5-45N			414	469	540	683	5	Rc1/2	SH-5715R	2102043	2502019
SGH-80-MMMT5-50N			556	610	681	824	5	Rc1/2	SH-5715R	2102043	2502019

NAMOH TOOLINGS

WE LISTEN WE INNOVATE

SGS-*-MM (STRAIGHT FLUTE HOLDER WITH TAPER SHANK)

- The inner cooling structure of holder has excellent cooling effect and chip removal performance.
- Interchangeable insert structure can make inserts replacement on the machine tool directly.

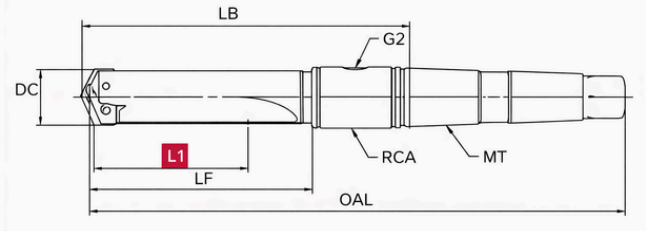

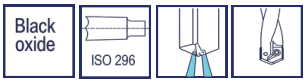

(Unit): mm

TYPE	CONNECTOR	DC	SIZE						ACCESSORIES		
			L1	LF	LB	OAL	MT	G2 inch	RCA		
SGS-Y0-MMMT2-20N	Y0	9.50 ~ 11.49 0.374”~0.452“	32	52	88	160	2	Rc1/16	SH-1905R	2102047	2502018
SGS-Y0-MMMT2-45N			86	106	142	214	2	Rc1/16	SH-1905R	2102047	2502018
SGS-Z0-MMMT2-20N	Z0	11.50 ~ 12.97 0.453“~0.511”	32	52	88	160	2	Rc1/16	SH-1905R	2102047	2502018
SGS-Z0-MMMT2-20N			86	106	142	214	2	Rc1/16	SH-1905R	2102047	2502018
SGS-00-MMMT2-20N	00	12.98 ~ 15.49 0.511"~0.61"	35	56	92	164	2	Rc1/16	SH-1905R	2102047	2502018
SGS-00-MMMT2-45N			89	110	146	218	2	Rc1/16	SH-1905R	2102047	2502018
SGS-00-MMMT2-60N			178	199	235	307	2	Rc1/16	SH-1905R	2102047	2502018
SGS-05-MMMT2-20N	05	15.50 ~ 17.85 0.61"~0.703“	35	56	92	164	2	Rc1/16	SH-1905R	2102047	2502018
SGS-05-MMMT2-45N			89	110	146	218	2	Rc1/16	SH-1905R	2102047	2502018
SGS-05-MMMT2-60N			178	199	235	307	2	Rc1/16	SH-1905R	2102047	2502018
SGS-05-MMMT2-70N			295	325	361	433	2	Rc1/16	SH-1905R	2102047	2502018
SGS-10-MMMT3-20N	10	17.86 ~ 21.99 0.703"~0.866”	70	98	143	233	3	Rc1/8	SH-2540R	2102049	2502016
SGS-10-MMMT3-45N			219	251	295	385	3	Rc1/8	SH-2540R	2102049	2502016
SGS-10-MMMT3-60N			363	395	439	529	3	Rc1/8	SH-2540R	2102049	2502016
SGS-15-MMMT3-20N	15	22.00 ~ 24.60 0.866"~0.969"	70	98	143	233	3	Rc1/8	SH-2540R	2102049	2502016
SGS-15-MMMT3-45N			219	251	295	385	3	Rc1/8	SH-2540R	2102049	2502016
SGS-15-MMMT3-60N			263	395	439	529	3	Rc1/8	SH-2540R	2102049	2502016
SGS-20-MMMT4-20N	20	24.61 ~ 29.99 0.969“~1.181”	86	114	160	274	4	Rc1/8	SH-2540R	2102045	2502020
SGS-20-MMMT4-45N			238	267	313	426	4	Rc1/8	SH-2540R	2102045	2502020
SGS-20-MMMT4-60N			400	429	475	588	4	Rc1/8	SH-2540R	2102045	2502020

NAMOH TOOLINGS

WE LISTEN WE INNOVATE

SGS-*-MM (STRAIGHT FLUTE HOLDER WITH TAPER SHANK)

- The inner cooling structure of holder has excellent cooling effect and chip removal performance
- Interchangeable insert structure can make inserts replacement on the machine tool directly.

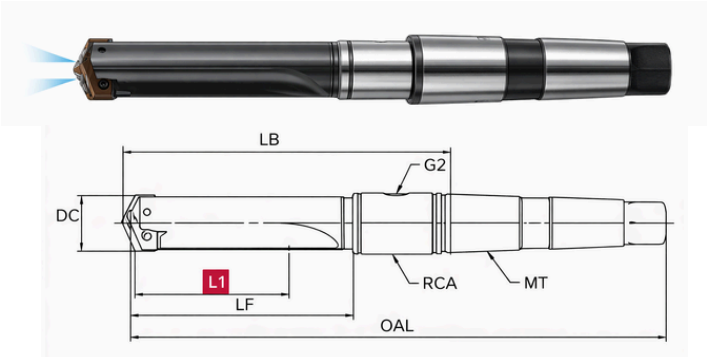

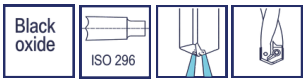

(Unit): mm

TYPE	CONNECTOR	DC	SIZE						ACCESSORIES		
			L1	LF	LB	OAL	MT	G2 inch	RCA		
SGS-25-MMMT4-20N	25	30.00 ~ 35.50 1.181"~1.398"	86	114	168	281	4	Rc1/4	SH-3175R	2102045	2502020
SGS-25-MMMT4-45N			238	267	320	433	4	Rc1/4	SH-3175R	2102045	2502020
SGS-25-MMMT4-60N			400	429	482	595	4	Rc1/4	SH-3175R	2102045	2502020
SGS-30-MMMT4-20N	30	35.51 ~ 41.99 1.398"~1.653"	121	152	206	319	4	Rc1/4	SH-3175R	2102044	2502015
SGS-30-MMMT4-45N			260	292	346	459	4	Rc1/4	SH-3175R	2102044	2502015
SGS-30-MMMT4-50N			349	381	435	548	4	Rc1/4	SH-3175R	2102044	2502015
SGS-30-MMMT4-70N			559	591	645	757	4	Rc1/4	SH-3175R	2102044	2502015
SGS-30-MMMT4-90N			787	819	873	986	4	Rc1/4	SH-3175R	2102044	2502015
SGS-35-MMMT4-20N	35	42.00 ~ 47.99 1.654"~1.899"	121	152	206	319	4	Rc1/4	SH-3175R	2102044	2502015
SGS-35-MMMT4-45N			260	292	346	459	4	Rc1/4	SH-3175R	2102044	2502015
SGS-35-MMMT4-50N			349	381	435	548	4	Rc1/4	SH-3175R	2102044	2502015
SGS-35-MMMT4-70N			559	591	645	757	4	Rc1/4	SH-3175R	2102044	2502015
SGS-35-MMMT4-90N			787	819	873	986	4	Rc1/4	SH-3175R	2102044	2502015
SGS-40-MMMT5-20N	40	48.00 ~ 55.99 1.89"- 2.204"	130	165	219	364	5	Rc1/4	SH-4445R	2102044	2502015
SGS-40-MMMT5-45N			350	385	445	589	5	Rc1/4	SH-4445R	2102044	2502015
SGS-40-MMMT5-50N			422	457	511	656	5	Rc1/4	SH-4445R	2102044	2502015
SGS-40-MMMT5-70N			625	660	714	859	5	Rc1/4	SH-4445R	2102044	2502015
SGS-40-MMMT5-90N			879	194	968	1113	5	Rc1/4	SH-4445R	2102044	2502015
SGS-45-MMMT5-20N	45	56.00 ~ 65.09 2.205"-2.563"	130	216	219	364	5	Rc1/4	SH-4445R	2102044	2502015
SGS-45-MMMT5-45N			350	412	445	589	5	Rc1/4	SH-4445R	2102044	2502015
SGS-45-MMMT5-50N			422	508	511	656	5	Rc1/4	SH-4445R	2102044	2502015
SGS-45-MMMT5-70N			615	705	714	859	5	Rc1/4	SH-4445R	2102044	2502015
SGS-45-MMMT5-90N			879	933	968	1113	5	Rc1/4	SH-4445R	2102044	2502015

NAMOH TOOLINGS

WE LISTEN WE INNOVATE

SGS-*-MM (STRAIGHT FLUTE HOLDER WITH TAPER SHANK)

- The inner cooling structure of holder has excellent cooling effect and chip removal performance.
- Interchangeable insert structure can make inserts replacement on the machine tool directly.

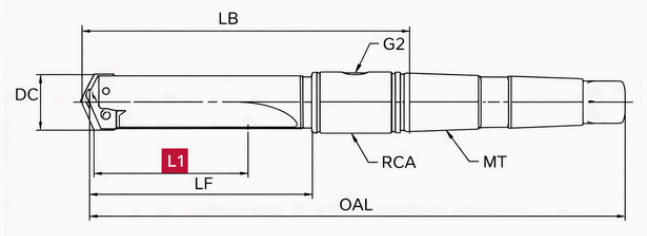

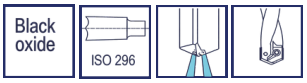

(Unit): mm

TYPE	CONNECTOR	DC	SIZE						ACCESSORIES		
			L1	LF	LB	OAL	MT	G2 inch	RCA		
SGS-50-MMMT5-20N	50	63.50 ~ 76.99 2.5”~3.031”	172	216	287	430	5	Rc1/2	SH-5715R	2102043	2502019
SGS-50-MMMT5-45N			368	412	483	626	5	Rc1/2	SH-5715R	2102043	2502019
SGS-50-MMMT5-50N			464	508	579	722	5	Rc1/2	SH-5715R	2102043	2502019
SGS-50-MMMT5-70N			660	705	776	919	5	Rc1/2	SH-5715R	2102043	2502019
SGS-50-MMMT5-90N			889	933	1005	1148	5	Rc1/2	SH-5715R	2102043	2502019
SGS-55-MMMT5-20N	55	77.00 ~ 89.09 3.031"~3.507"	172	216	287	430	5	Rc1/2	SH-5715R	2102043	2502019
SGS-55-MMMT5-50N			464	508	579	722	5	Rc1/2	SH-5715R	2102043	2502019
SGS-55-MMMT5-70N			660	705	776	919	5	Rc1/2	SH-5715R	2102043	2502019
SGS-55-MMMT5-90N			889	933	1005	1148	5	Rc1/2	SH-5715R	2102043	2502019
SGS-70-MMMT5-20N	70	89.10 ~ 101.60 3.508"~4”	172	225	297	440	5	Rc1/2	SH-5715R	2102043	2502019
SGS-70-MMMT5-50N			556	610	681	824	5	Rc1/2	SH-5715R	2102043	2502019
SGS-70-MMMT5-70N			685	740	811	954	5	Rc1/2	SH-5715R	2102043	2502019
SGS-70-MMMT5-90N			939	994	1065	1208	5	Rc1/2	SH-5715R	2102043	2502019
SGS-80-MMMT5-20N	80	101.61 ~ 114.30 4"~4.5"	172	225	297	440	5	Rc1/2	SH-5715R	2102043	2502019
SGS-80-MMMT5-50N			556	610	681	824	5	Rc1/2	SH-5715R	2102043	2502019
SGS-80-MMMT5-70N			685	740	811	954	5	Rc1/2	SH-5715R	2102043	2502019
SGS-80-MMMT5-90N			939	994	1065	1208	5	Rc1/2	SH-5715R	2102043	2502019

NAMOH TOOLINGS

WE LISTEN WE INNOVATE

SGS-*-MK (STRAIGHT FLUTE HOLDER WITH ONE FLAT SHANK)

- The inner cooling structure of holder has excellent cooling effect and chip removal performance.
- Interchangeable insert structure can make inserts replacement on the machine tool directly.

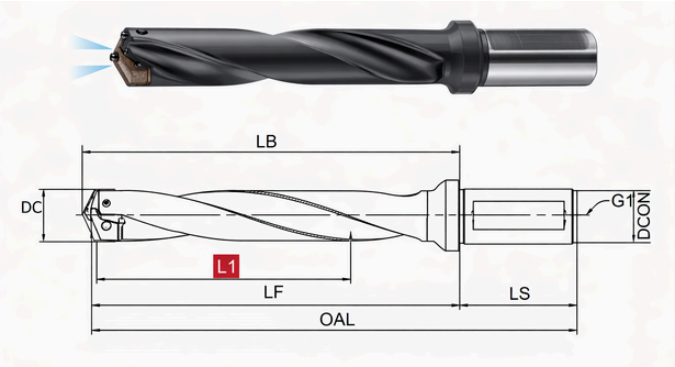

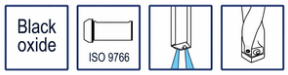

(Unit): mm

TYPE	CONNECTOR	DC	SIZE							ACCESSORIES	
			L1	LF	LB	OAL	DCON	LS	G2 inch		
SGS-Y0-MK020-20N	Y0	9.5~11.49 0.374“~0.452“	32	61	64	111	20	50	Rc1/8	2102047	2502018
SGS-Y0-MK020-45N			86	115	140	165	20	50	Rc1/8	2102047	2502018
SGS-Y0-MK020-50N			111	141	143	191	20	50	Rc1/8	2102047	2502018
SGS-Y0-MK020-70N			222	252	254	302	20	50	Rc1/8	2102047	2502018
SGS-Y0-MK020-90N			290	320	322	370	20	50	Rc1/8	2102047	2502018
SGS-Z0-MK020-20N	Z0	11.50 ~ 12.97 0.453“~0.511”	32	61	64	111	20	50	Rc1/8	2102048	2502018
SGS-Z0-MK020-45N			86	115	140	165	20	50	Rc1/8	2102048	2502018
SGS-Z0-MK020-50N			111	141	143	191	20	50	Rc1/8	2102048	2502018
SGS-Z0-MK020-70N			222	252	254	310	20	50	Rc1/8	2102048	2502018
SGS-Z0-MK020-90N			290	320	322	370	20	50	Rc1/8	2102048	2502018
SGS-00-MK020-20N	00	12.98 ~ 15.49 0.511"~0.61"	35	64	66	114	20	50	Rc1/8	2102230	2502017
SGS-00-MK020-45N			89	118	142	168	20	50	Rc1/8	2102230	2502017
SGS-00-MK020-50N			114	143	146	193	20	50	Rc1/8	2102230	2502017
SGS-00-MK020-60N			178	206	209	256	20	50	Rc1/8	2102230	2502017
SGS-00-MK020-70N			295	324	327	374	20	50	Rc1/8	2102230	2502017
SGS-00-MK020-90N			387	416	419	466	20	50	Rc1/8	2102230	2502017
SGS-05-MK020-20N	05	15.50 ~ 17.85 0.61"~0.703“	35	64	66	114	20	50	Rc1/8	2102046	2502017
SGS-05-MK020-45N			89	118	142	168	20	50	Rc1/8	2102046	2502017
SGS-05-MK020-50N			114	143	146	193	20	50	Rc1/8	2102046	2502017
SGS-05-MK020-60N			178	206	209	256	20	50	Rc1/8	2102046	2502017
SGS-05-MK020-70N			295	324	327	374	20	50	Rc1/8	2102046	2502017
SGS-05-MK020-90N			387	416	419	466	20	50	Rc1/8	2102046	2502017

NAMOH TOOLINGS

WE LISTEN WE INNOVATE

SGS-*-MK (STRAIGHT FLUTE HOLDER WITH ONE FLAT SHANK)

- The inner cooling structure of holder has excellent cooling effect and chip removal performance.
- Interchangeable insert structure can make inserts replacement on the machine tool directly.

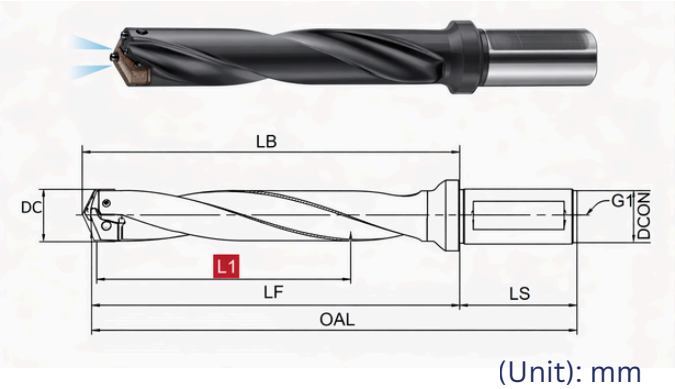

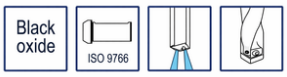

(Unit): mm

TYPE	CONNECTOR	DC	SIZE							ACCESSORIES	
			L1	LF	LB	OAL	DCON	LS	G2 inch		
SGS-10-MK025-20N	10	17.86 ~ 21.99 0.703"~0.866"	67	107	111	163	25	56	Rc1/8	2102049	2502016
SGS-10-MK025-45N			219	256	262	312	25	56	Rc1/8	2102049	2502016
SGS-10-MK025-50N			270	307	310	363	25	56	Rc1/8	2102049	2502016
SGS-10-MK025-60N			365	401	404	457	25	56	Rc1/8	2102049	2502016
SGS-10-MK025-70N			457	495	498	551	25	56	Rc1/8	2102049	2502016
SGS-10-MK025-90N			569	603	606	659	25	56	Rc1/8	2102049	2502016
SGS-15-MK025-20N	15	22.00 ~ 24.60 0.866"~0.969"	67	107	111	163	25	56	Rc1/8	2102049	2502016
SGS-15-MK025-45N			219	256	262	312	25	56	Rc1/8	2102049	2502016
SGS-15-MK025-50N			270	307	310	363	25	56	Rc1/8	2102049	2502016
SGS-15-MK025-60N			363	401	404	457	25	56	Rc1/8	2102049	2502016
SGS-15-MK025-70N			457	495	498	551	25	56	Rc1/8	2102049	2502016
SGS-15-MK025-90N			569	603	606	659	25	56	Rc1/8	2102049	2502016
SGS-20-MK032-20N	20	24.61 ~ 29.99 0.969“~1.181”	86	129	132	189	32	60	Rc1/4	2102045	2502020
SGS-20-MK032-45N			238	281	290	341	32	60	Rc1/4	2102045	2502020
SGS-20-MK032-50N			289	332	336	392	32	60	Rc1/4	2102045	2502020
SGS-20-MK032-60N			400	443	447	503	32	60	Rc1/4	2102045	2502020
SGS-20-MK032-70N			511	554	558	614	32	60	Rc1/4	2102045	2502020
SGS-20-MK032-90N			692	735	739	795	32	60	Rc1/4	2102045	2502020
SGS-25-MK032-20N	25	30.00 ~ 35.50 1.181"~1.398	86	129	132	189	32	60	Rc1/4	2102045	2502020
SGS-25-MK032-45N			238	281	290	341	32	60	Rc1/4	2102045	2502020
SGS-25-MK032-50N			289	332	336	392	32	60	Rc1/4	2102045	2502020
SGS-25-MK032-60N			400	443	447	503	32	60	Rc1/4	2102045	2502020
SGS-25-MK032-70N			511	554	558	614	32	60	Rc1/4	2102045	2502020
SGS-25-MK032-90N			692	735	739	795	32	60	Rc1/4	2102045	2502020

NAMOH TOOLINGS

WE LISTEN WE INNOVATE

SGS-*-MK (STRAIGHT FLUTE HOLDER WITH ONE FLAT SHANK)

- The inner cooling structure of holder has excellent cooling effect and chip removal performance.
- Interchangeable insert structure can make inserts replacement on the machine tool directly.

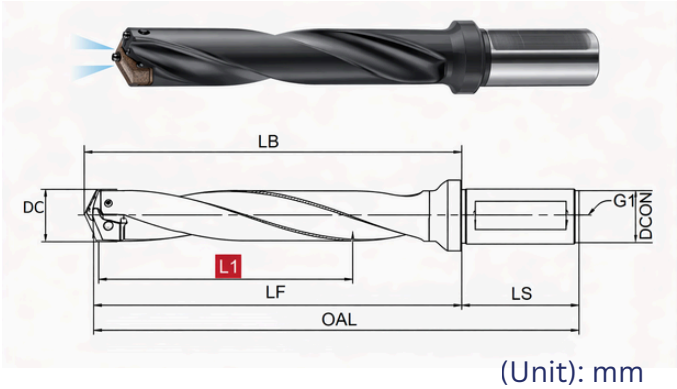

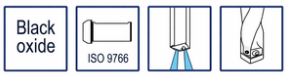

(Unit): mm

TYPE	CONNECTOR	DC	SIZE							ACCESSORIES	
			L1	LF	LB	OAL	DCON	LS	G2 inch		
SGS-30-MK040-20N	30	35.51 ~ 41.99 1.398”~1.653“	121	173	178	243	40	70	Rc1/4	2102044	2502015
SGS-30-MK040-45N			260	313	332	383	40	70	Rc1/4	2102044	2502015
SGS-30-MK040-50N			349	402	406	472	40	70	Rc1/4	2102044	2502015
SGS-30-MK040-60N			454	468	473	538	40	70	Rc1/4	2102044	2502015
SGS-30-MK040-70N			559	611	616	681	40	70	Rc1/4	2102044	2502015
SGS-30-MK040-90N			787	840	845	910	40	70	Rc1/4	2102044	2502015
SGS-35-MK040-20N	3	42.00 ~ 47.99 1.654"~1.899”	121	173	178	243	40	70	Rc1/4	2102044	2502015
SGS-35-MK040-45N			260	313	332	383	40	70	Rc1/4	2102044	2502015
SGS-35-MK040-50N			349	402	406	472	40	70	Rc1/4	2102044	2502015
SGS-35-MK040-60N			454	468	473	538	40	70	Rc1/4	2102044	2502015
SGS-35-MK040-70N			559	611	616	681	40	70	Rc1/4	2102044	2502015
SGS-35-MK040-90N			787	840	845	910	40	70	Rc1/4	2102044	2502015
SGS-40-MK040-20N	40	48.00 ~ 55.99 1.89"- 2.204"	130	179	184	249	40	70	Rc1/4	2102044	2502015
SGS-40-MK040-45N			350	399	404	469	40	70	Rc1/4	2102044	2502015
SGS-40-MK040-50N			422	472	476	542	40	70	Rc1/4	2102044	2502015
SGS-40-MK040-60N			524	586	591	656	40	70	Rc1/4	2102044	2502015
SGS-40-MK040-70N			625	675	680	745	40	70	Rc1/4	2102044	2502015
SGS-40-MK040-90N			879	929	934	999	40	70	Rc1/4	2102044	2502015
SGS-45-MK040-20N	45	56.00 ~ 65.09 2.205"-2.563"	130	179	184	249	40	70	Rc1/4	2102044	2502015
SGS-45-MK040-45N			350	399	404	469	40	70	Rc1/4	2102044	2502015
SGS-45-MK040-50N			422	472	476	542	40	70	Rc1/4	2102044	2502015
SGS-45-MK040-60N			524	586	591	656	40	70	Rc1/4	2102044	2502015
SGS-45-MK040-70N			625	675	680	745	40	70	Rc1/4	2102044	2502015
SGS-45-MK040-90N			879	929	934	999	40	70	Rc1/4	2102044	2502015

NAMOH TOOLINGS

WE LISTEN WE INNOVATE

SGS-*-MK (STRAIGHT FLUTE HOLDER WITH ONE FLAT SHANK)

- The inner cooling structure of holder has excellent cooling effect and chip removal performance.
- Interchangeable insert structure can make inserts replacement on the machine tool directly.

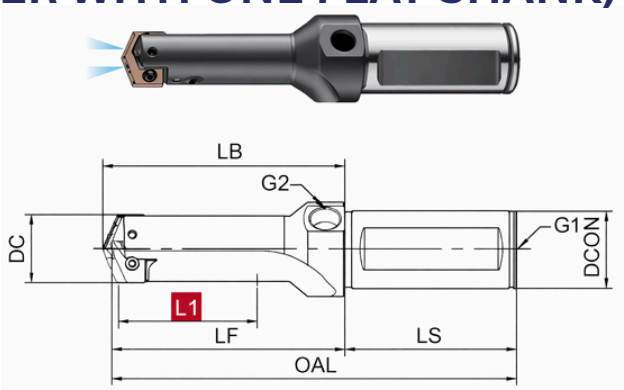

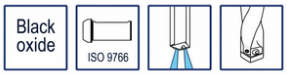

(Unit): mm

TYPE	CONNECTOR	DC	SIZE								ACCESSORIES	
			L1	LF	LB	OAL	DCON	LS	G1 inch	G2 inch		
SGS-Y0-MK016-10N	Y0	9.5~11.49 0.374“~0.452“	19.0	48.0	50.0	96.0	16.0	48.0	Rc1/16	Rc1/8	2102047	2502018
SGS-Z0-MK016-10N	Z0	11.50 ~ 12.97 0.453“~0.511”	19.0	48.0	50.0	96.0	16.0	48.0	Rc1/16	Rc1/8	2102048	2502018
SGS-00-MK020-10N	00	12.98 ~ 15.49 0.511"~0.61"	22.0	48.0	50.0	98.0	20.0	50.0	Rc1/8	Rc1/8	2102230	2502017
SGS-05-MK020-10N	05	15.50 ~ 17.85 0.61"~0.703“	22.0	48.0	50.0	98.0	20.0	50.0	Rc1/8	Rc1/8	2102046	2502017
SGS-10-MK025-10N	10	17.86 ~ 21.99 0.703"~0.866”	48.0	76.0	79.0	132.0	25.0	56.0	Rc1/8	Rc1/8	2102049	2502016
SGS-15-MK025-10N	15	22.00 ~ 24.60 0.866"~0.969"	48.0	76.0	79.0	132.0	25.0	56.0	Rc1/8	Rc1/8	2102049	2502016
SGS-20-MK032-10N	20	24.61 ~ 29.99 0.969“~1.181”	57.0	89.0	92.0	149.0	32.0	60.0	Rc1/4	Rc1/8	2102045	2502020
SGS-25-MK032-10N	25	30.00 ~ 35.50 1.181"~1.398“	57.0	89.0	92.0	149.0	32.0	60.0	Rc1/4	Rc1/8	2102045	2502020
SGS-30-MK040-10N	30	35.51 ~ 41.99 1.398”~1.653“	76.0	125.0	130.0	195.0	40.0	70.0	Rc1/4	Rc1/4	2102044	2502015
SGS-35-MK040-10N	35	42.00 ~ 47.99 1.654"~1.899”	76.0	125.0	130.0	195.0	40.0	70.0	Rc1/4	Rc1/4	2102044	2502015

NAMOH TOOLINGS

WE LISTEN WE INNOVATE

SP-*-10XH (HSS INSERT OF SPADE DRILL)

- Diameter range: 13~114.3 mm.
- Drilling accuracy: IT10~IT11.
- HPM10-Powder HSS for steel with hardness below HB275.

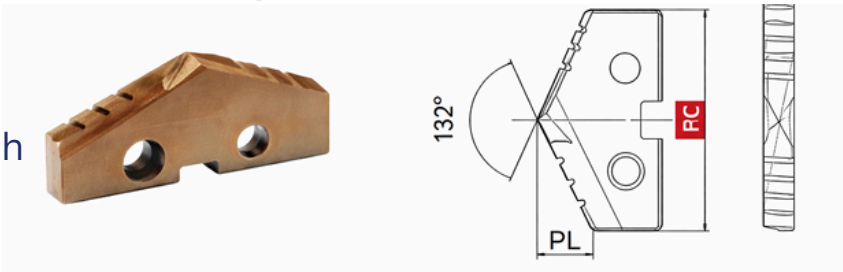

HSS HPC

(Unit): mm

MODEL	SIZE			CONNECTOR	INVENTORY
	DC	PL	T		
SP-0-M0130-10XH	13.00	2.9	3.18	00	▲
SP-0-M0135-10XH	13.50	3.0			▲
SP-0-M0140-10XH	14.00	3.1			▲
SP-0-M0145-10XH	14.50	3.2			▲
SP-0-M0150-10XH	15.00	3.3			▲
SP-0-M0155-10XH	15.50	3.5	3.18	05	▲
SP-0-M0160-10XH	16.00	3.6			▲
SP-0-M0165-10XH	16.50	3.7			▲
SP-0-M0170-10XH	17.00	3.8			▲
SP-0-M0175-10XH	17.50	3.9			▲
SP-1-M0180-10XH	18.00	4.0	3.97	10	▲
SP-1-M0185-10XH	18.50	4.1			▲
SP-1-M0190-10XH	19.00	4.2			▲
SP-1-M0195-10XH	19.50	4.3			▲
SP-1-M0200-10XH	20.00	4.5			▲
SP-1-M0205-10XH	20.50	4.6			▲
SP-1-M0210-10XH	21.00	4.7			▲
SP-1-M0215-10XH	21.50	4.8			▲
SP-1-M0220-10XH	22.00	4.9	3.97	15	▲
SP-1-M0230-10XH	23.00	5.1			▲
SP-1-M0240-10XH	24.00	5.3			▲
SP-2-M0250-10XH	25.00	5.6	4.76	20	▲
SP-2-M0260-10XH	26.00	5.8			▲
SP-2-M0270-10XH	27.00	6.0			▲
SP-2-M0280-10XH	28.00	6.2			▲
SP-2-M0290-10XH	29.00	6.5			▲

MODEL	SIZE			CONNECTOR	INVENTORY
	DC	PL	T		
SP-2-M0300-10XH	30.00	6.7	4.76	25	▲
SP-2-M0310-10XH	31.00	6.9			▲
SP-2-M0320-10XH	32.00	7.1			▲
SP-2-M0330-10XH	33.00	7.3	4.76	25	▲
SP-2-M0340-10XH	34.00	7.6			▲
SP-2-M0350-10XH	35.00	7.8			▲
SP-3-M0360-10XH	36.00	8.0	6.35	30	▲
SP-3-M0370-10XH	37.00	8.2			▲
SP-3-M0380-10XH	38.00	8.5			▲
SP-3-M0390-10XH	39.00	8.7			▲
SP-3-M0400-10XH	40.00	8.9			▲
SP-3-M0410-10XH	41.00	9.1			▲
SP-3-M0420-10XH	42.00	9.3	6.35	35	▲
SP-3-M0430-10XH	43.00	9.6			▲
SP-3-M0440-10XH	44.00	9.8			▲
SP-3-M0450-10XH	45.00	10.0			▲
SP-3-M0460-10XH	46.00	10.2			▲
SP-3-M0470-10XH	47.00	10.5			▲
SP-4-M0480-10XH	48.00	10.7	7.94	40	▲
SP-4-M0490-10XH	49.00	10.9			▲
SP-4-M0500-10XH	50.00	11.1			▲
SP-4-M0510-10XH	51.00	11.4			▲
SP-4-M0520-10XH	52.00	11.6			▲
SP-4-M0530-10XH	53.00	11.8			▲
SP-4-M0540-10XH	54.00	12.0			▲
SP-4-M0550-10XH	55.00	12.2			▲

APPLICABLE TABLE OF PROCESSED MATERIALS

ISO	P	P	P	P	M	K	K	N	N	N	S	S	H	H
WORKPIECE MATERIAL	MLID STEEL	STRUCTURSL STEEL	ALLOR STEEL	TOOL STEEL	STAINLESS STEEL	CASTIRON	MALLEABLE CAST IRON	ALUMINUM ALLOY	CAST ALUMINUM ALLOYS	COPPER ALLOYS	SUPER ALLOYS	TITANIUM ALLOYS	HARDENED STEEL	HARDENED STEEL
	<500N	<750N	<1400N	<1100N	<900N	<750N	<1100N	Si<12%	Si>12%	<750N	<1100N	<1100N	<1400N	<1600N
10XH	●	●	○	○	○	○		○	○	○				

NAMOH TOOLINGS

WE LISTEN WE INNOVATE

SP-*-10XH (HSS INSERT OF SPADE DRILL)

- Diameter range: 13~114.3 mm.
- Drilling accuracy: IT10~IT11.
- HPM10-Powder HSS for steel with hardness below HB275.

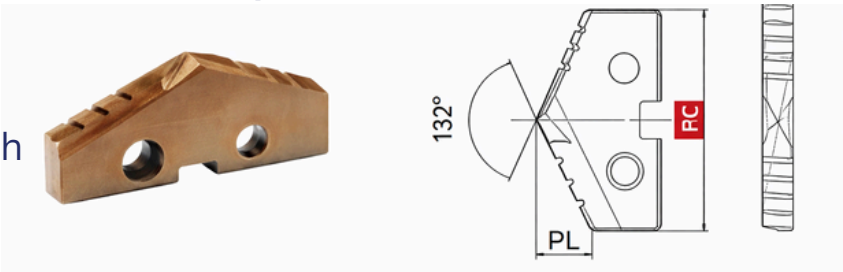

HSS HPC

(Unit): mm

MODEL	SIZE			CONNECTOR	INVENTORY
	DC	PL	T		
SP-4-M0560-10XH	56.00	12.5	7.94	45	▲
SP-4-M0570-10XH	57.00	12.7			▲
SP-4-M0580-10XH	58.00	12.9			▲
SP-4-M0590-10XH	59.00	13.1			▲
SP-4-M0600-10XH	60.00	13.4			▲
SP-4-M0610-10XH	61.00	13.6			▲
SP-4-M0620-10XH	62.00	13.8	7.94	45	▲
SP-4-M0630-10XH	63.00	14.0			▲
SP-4-M0640-10XH	64.00	14.2			▲
SP-4-M0650-10XH	65.00	14.5			▲
SP-5-M0640-10XH	64.00	10.4	11.11	50	▲
SP-5-M0650-10XH	65.00	10.6			▲
SP-5-M0660-10XH	66.00	10.7			▲
SP-5-M0680-10XH	68.00	11.0			▲
SP-5-M0770-10XH	70.00	11.4			▲
SP-5-M0720-10XH	72.00	11.7			▲
SP-5-M0740-10XH	74.00	12.0			▲
SP-5-M0760-10XH	76.00	12.3			▲
SP-6-M0770-10XH	77.00	12.5	11.11	55	▲
SP-6-M0780-10XH	78.00	12.7			▲
SP-6-M0800-10XH	80.00	13.0			▲
SP-6-M0820-10XH	82.00	13.3			▲
SP-6-M0840-10XH	84.00	13.6			▲
SP-6-M0860-10XH	86.00	14.0			▲
SP-6-M0880-10XH	88.00	14.3			▲
SP-6-M0890-10XH	89.00	14.5			▲

MODEL	SIZE			CONNECTOR	INVENTORY
	DC	PL	T		
SP-7-M0900-10XH	90.00	14.6	11.11	70	▲
SP-7-M0920-10XH	92.00	14.9			▲
SP-7-M0940-10XH	94.00	15.3			▲
SP-7-M0960-10XH	96.00	15.6			▲
SP-7-M0960-10XH	98.00	15.9			▲
SP-7-M1000-10XH	100.00	16.2			▲
SP-8-M1020-10XH	102.00	16.6	11.11	80	▲
SP-8-M1040-10XH	104.00	16.9			▲
SP-8-M1060-10XH	106.00	17.2			▲
SP-8-M1080-10XH	108.00	17.5			▲
SP-8-M1100-10XH	110.00	17.9			▲
SP-8-M1120-10XH	112.00	18.2			▲
SP-8-M1140-10XH	114.00	18.5			▲

APPLICABLE TABLE OF PROCESSED MATERIALS

ISO	P	P	P	P	M	K	K	N	N	N	S	S	H	H
WORKPIECE MATERIAL	MLID STEEL	STRUCTURSL STEEL	ALLOR STEEL	TOOL STEEL	STAINLESS STEEL	CASTIRON	MALLEABLE CAST IRON	ALUMINUM ALLOY	CAST ALUMINUM ALLOYS	COPPER ALLOYS	SUPER ALLOYS	TITANIUM ALLOYS	HARDENED STEEL	HARDENED STEEL
	<500N	<750N	<1400N	<1100N	<900N	<750N	<1100N	Si<12%	Si>12%	<750N	<1100N	<1100N	<1400N	<1600N
10XH	●	●	○	○	○	○		○	○	○				

NAMOH TOOLINGS

WE LISTEN WE INNOVATE

SP-*-15XH (HSS INSERT OF SPADE DRILL)

- Diameter range: 13~114.3 mm.
- Drilling accuracy: IT10~IT11.
- HPM10-Powder HSS for steel with hardness below HB350.

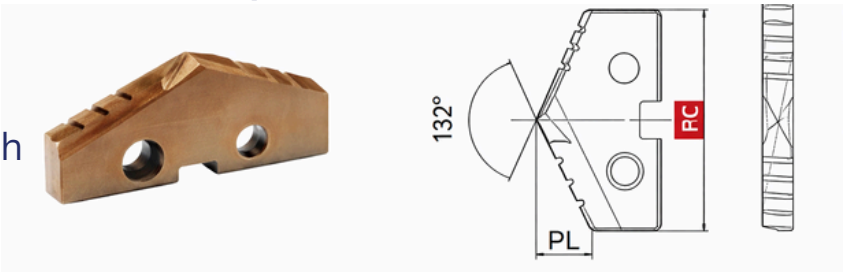

HSS HPC

(Unit): mm

MODEL	SIZE			CONNECTOR	INVENTORY
	DC	PL	T		
SP-0-M0130-15XH	13.00	2.9	3.18	00	▲
SP-0-M0135-15XH	13.50	3.0			▲
SP-0-M0140-15XH	14.00	3.1			▲
SP-0-M0145-15XH	14.50	3.2			▲
SP-0-M0150-15XH	15.00	3.3			▲
SP-0-M0155-15XH	15.50	3.5	3.18	05	▲
SP-0-M0160-15XH	16.00	3.6			▲
SP-0-M0165-15XH	16.50	3.7			▲
SP-0-M0170-15XH	17.00	3.8			▲
SP-0-M0175-15XH	17.50	3.9			▲
SP-1-M0180-15XH	18.00	4.0	3.97	10	▲
SP-1-M0185-15XH	18.50	4.1			▲
SP-1-M0190-15XH	19.00	4.2			▲
SP-1-M0195-15XH	19.50	4.3			▲
SP-1-M0200-15XH	20.00	4.5			▲
SP-1-M0205-15XH	20.50	4.6			▲
SP-1-M0210-15XH	21.00	4.7			▲
SP-1-M0215-15XH	21.50	4.8			▲
SP-1-M0220-15XH	22.00	4.9	3.97	15	▲
SP-1-M0230-15XH	23.00	5.1			▲
SP-1-M0240-15XH	24.00	5.3			▲
SP-2-M0250-15XH	25.00	5.6	4.76	20	▲
SP-2-M0260-15XH	26.00	5.8			▲
SP-2-M0270-15XH	27.00	6.0			▲
SP-2-M0280-15XH	28.00	6.2			▲
SP-2-M0290-15XH	29.00	6.5			▲

MODEL	SIZE			CONNECTOR	INVENTORY
	DC	PL	T		
SP-2-M0300-15XH	30.00	6.7	4.76	25	▲
SP-2-M0310-15XH	31.00	6.9			▲
SP-2-M0320-15XH	32.00	7.1			▲
SP-2-M0330-15XH	33.00	7.3			▲
SP-2-M0340-15XH	34.00	7.6			▲
SP-2-M0350-15XH	35.00	7.8			▲
SP-3-M0360-15XH	36.00	8.0	6.35	30	▲
SP-3-M0370-15XH	37.00	8.2			▲
SP-3-M0380-15XH	38.00	8.5			▲
SP-3-M0390-15XH	39.00	8.7			▲
SP-3-M0400-15XH	40.00	8.9			▲
SP-3-M0410-15XH	41.00	9.1			▲
SP-3-M0420-15XH	42.00	9.3	6.35	35	▲
SP-3-M0430-15XH	43.00	9.6			▲
SP-3-M0440-15XH	44.00	9.8			▲
SP-3-M0450-15XH	45.00	10.0			▲
SP-3-M0460-15XH	46.00	10.2			▲
SP-3-M0470-15XH	47.00	10.5			▲
SP-4-M0480-15XH	48.00	10.7	7.94	40	▲
SP-4-M0490-15XH	49.00	10.9			▲
SP-4-M0500-15XH	50.00	11.1			▲
SP-4-M0510-15XH	51.00	11.4			▲
SP-4-M0520-15XH	52.00	11.6			▲
SP-4-M0530-15XH	53.00	11.8			▲
SP-4-M0540-15XH	54.00	12.0			▲
SP-4-M0550-15XH	55.00	12.2			▲

APPLICABLE TABLE OF PROCESSED MATERIALS

ISO	P	P	P	P	M	K	K	N	N	N	S	S	H	H
WORKPIECE MATERIAL	MLID STEEL	STRUCTURSL STEEL	ALLOR STEEL	TOOL STEEL	STAINLESS STEEL	CASTIRON	MALLEABLE CAST IRON	ALUMINUM ALLOY	CAST ALUMINUM ALLOYS	COPPER ALLOYS	SUPER ALLOYS	TITANIUM ALLOYS	HARDENED STEEL	HARDENED STEEL
	<500N	<750N	<1400N	<1100N	<900N	<750N	<1100N	Si<12%	Si>12%	<750N	<1100N	<1100N	<1400N	<1600N
15XH	●	●	●	●	●	○	○	○	○	○	○			

NAMOH TOOLINGS

WE LISTEN WE INNOVATE

SP-*-15XH (HSS INSERT OF SPADE DRILL)

- Diameter range: 13~114.3 mm.
- Drilling accuracy: IT10~IT11.
- HPM10-Powder HSS for steel with hardness below HB350.

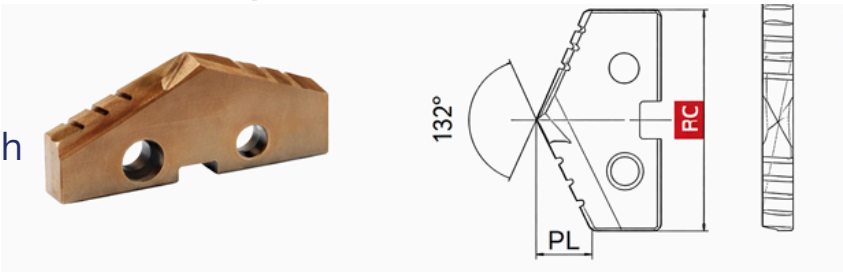

HSS HPC

(Unit): mm

MODEL	SIZE			CONNECTOR	INVENTORY
	DC	PL	T		
SP-4-M0560-15XH	56.00	12.5	7.94	45	▲
SP-4-M0570-15XH	57.00	12.7			▲
SP-4-M0580-15XH	58.00	12.9			▲
SP-4-M0590-15XH	59.00	13.1			▲
SP-4-M0600-15XH	60.00	13.4			▲
SP-4-M0610-15XH	61.00	13.6			▲
SP-4-M0620-15XH	62.00	13.8			▲
SP-4-M0630-15XH	63.00	14.0			▲
SP-4-M0640-15XH	64.00	14.2			▲
SP-4-M0650-15XH	65.00	14.5			▲
SP-5-M0640-15XH	64.00	10.4	11.11	50	▲
SP-5-M0650-15XH	65.00	10.6			▲
SP-5-M0660-15XH	66.00	10.7			▲
SP-5-M0680-15XH	68.00	11.0			▲
SP-5-M0770-15XH	70.00	11.4			▲
SP-5-M0720-15XH	72.00	11.7			▲
SP-5-M0740-15XH	74.00	12.0			▲
SP-5-M0760-15XH	76.00	12.3			▲
SP-6-M0770-15XH	77.00	12.5	11.11	55	▲
SP-6-M0780-15XH	78.00	12.7			▲
SP-6-M0800-15XH	80.00	13.0			▲
SP-6-M0820-15XH	82.00	13.3			▲
SP-6-M0840-15XH	84.00	13.6			▲
SP-6-M0860-15XH	86.00	14.0			▲
SP-6-M0880-15XH	88.00	14.3			▲
SP-6-M0890-15XH	89.00	14.5			▲

MODEL	SIZE			CONNECTOR	INVENTORY
	DC	PL	T		
SP-7-M0900-15XH	90.00	14.6	11.11	70	▲
SP-7-M0920-15XH	92.00	14.9			▲
SP-7-M0940-15XH	94.00	15.3			▲
SP-7-M0960-15XH	96.00	15.6			▲
SP-7-M0980-15XH	98.00	15.9			▲
SP-7-M1000-15XH	100.00	16.2			▲
SP-8-M1020-15XH	102.00	16.6	11.11	80	▲
SP-8-M1040-15XH	104.00	16.9			▲
SP-8-M1060-15XH	106.00	17.2			▲
SP-8-M1080-15XH	108.00	17.5			▲
SP-8-M1100-15XH	110.00	17.9			▲
SP-8-M1120-15XH	112.00	18.2			▲
SP-8-M1140-15XH	114.00	18.5			▲

APPLICABLE TABLE OF PROCESSED MATERIALS

ISO	P	P	P	P	M	K	K	N	N	N	S	S	H	H
WORKPIECE MATERIAL	MLID STEEL	STRUCTURSL STEEL	ALLOR STEEL	TOOL STEEL	STAINLESS STEEL	CASTIRON	MALLEABLE CAST IRON	ALUMINUM ALLOY	CAST ALUMINUM ALLOYS	COPPER ALLOYS	SUPER ALLOYS	TITANIUM ALLOYS	HARDENED STEEL	HARDENED STEEL
	<500N	<750N	<1400N	<1100N	<900N	<750N	<1100N	Si<12%	Si>12%	<750N	<1100N	<1100N	<1400N	<1600N
15XH	●	●	●	●	●	○	○	○	○	○	○			

NAMOH TOOLINGS

WE LISTEN WE INNOVATE

SP-*-25XH (HSS INSERT OF SPADE DRILL)

- Diameter range: 9.5~65 mm.
- Drilling accuracy: IT10~IT11.
- HPM10-Powder HSS for steel with hardness below HB400.

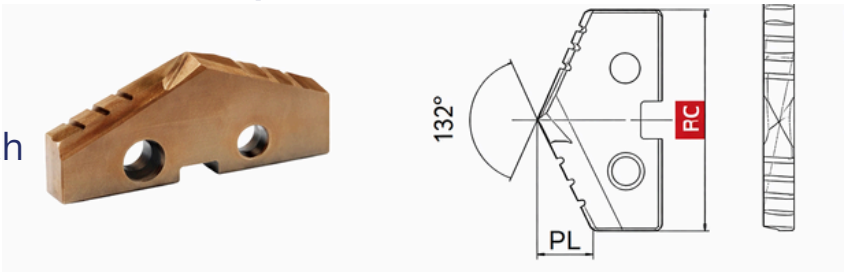

HSS HPC

(Unit): mm

MODEL	SIZE			CONNECTOR	INVENTORY
	DC	PL	T		
SP-Y-M0095-25XH	9.50	2.1	2.38	Y0	▲
SP-Y-M0098-25XH	9.80	2.2			▲
SP-Y-M0100-25XH	10.00	2.2			▲
SP-Y-M0102-25XH	10.20	2.3			▲
SP-Y-M0105-25XH	10.50	2.3			▲
SP-Y-M0108-25XH	10.80	2.4			▲
SP-Y-M0110-25XH	11.00	2.4			▲
SP-Z-M0115-25XH	11.50	2.6	2.38	Z0	▲
SP-Z-M0120-25XH	12.00	2.7			▲
SP-Z-M0125-25XH	12.50	2.8			▲
SP-0-M0130-25XH	13.00	2.9	3.18	00	▲
SP-0-M0135-25XH	13.50	3.0			▲
SP-0-M0140-25XH	14.00	3.1			▲
SP-0-M0145-25XH	14.50	3.2			▲
SP-0-M0150-25XH	15.00	3.3			▲
SP-0-M0155-25XH	15.50	3.5	3.18	05	▲
SP-0-M0160-25XH	16.00	3.6			▲
SP-0-M0165-25XH	16.50	3.7			▲
SP-0-M0170-25XH	17.00	3.8			▲
SP-0-M0175-25XH	17.50	3.9			▲
SP-1-M0180-25XH	18.00	4.0	3.97	10	▲
SP-1-M0185-25XH	18.50	4.1			▲
SP-1-M0190-25XH	19.00	4.2			▲
SP-1-M0195-25XH	19.50	4.3			▲
SP-1-M0200-25XH	20.00	4.5			▲
SP-1-M0205-25XH	20.50	4.6			▲

MODEL	SIZE			CONNECTOR	INVENTORY
	DC	PL	T		
SP-1-M0210-25XH	21.00	4.7	3.97	10	▲
SP-1-M0215-25XH	21.50	4.8			▲
SP-1-M0220-25XH	22.00	4.9	3.97	15	▲
SP-1-M0230-25XH	23.00	5.1			▲
SP-1-M0240-25XH	24.00	5.3			▲
SP-2-M0250-25XH	25.00	5.6	4.76	20	▲
SP-2-M0260-25XH	26.00	5.8			▲
SP-2-M0270-25XH	27.00	6.0			▲
SP-2-M0280-25XH	28.00	6.2			▲
SP-2-M0290-25XH	29.00	6.5			▲
SP-2-M0300-25XH	30.00	6.7	4.76	25	▲
SP-2-M0310-25XH	31.00	6.9			▲
SP-2-M0320-25XH	32.00	7.1			▲
SP-2-M0330-25XH	33.00	7.3			▲
SP-2-M0340-25XH	34.00	7.6			▲
SP-2-M0350-25XH	35.00	7.8			▲
SP-3-M0360-25XH	36.00	8.0	6.35	30	▲
SP-3-M0370-25XH	37.00	8.2			▲
SP-3-M0380-25XH	38.00	8.5			▲
SP-3-M0390-25XH	39.00	8.7			▲
SP-3-M0400-25XH	40.00	8.9			▲
SP-3-M0410-25XH	41.00	9.1			▲
SP-3-M0420-25XH	42.00	9.3	6.35	35	▲
SP-3-M0430-25XH	43.00	9.6			▲
SP-3-M0440-25XH	44.00	9.8			▲
SP-3-M0450-25XH	45.00	10.0			▲

APPLICABLE TABLE OF PROCESSED MATERIALS

ISO	P	P	P	P	M	K	K	N	N	N	S	S	H	H
WORKPIECE MATERIAL	MLID STEEL	STRUCTURSL STEEL	ALLOR STEEL	TOOL STEEL	STAINLESS STEEL	CASTIRON	MALLEABLE CAST IRON	ALUMINUM ALLOY	CAST ALUMINUM ALLOYS	COPPER ALLOYS	SUPER ALLOYS	TITANIUM ALLOYS	HARDENED STEEL	HARDENED STEEL
	<500N	<750N	<1400N	<1100N	<900N	<750N	<1100N	Si<12%	Si>12%	<750N	<1100N	<1100N	<1400N	<1600N
25XH	●	●	●	●	●	●	●	○	○	○	○	○	●	

NAMOH TOOLINGS

WE LISTEN WE INNOVATE

SP-*-25XH (HSS INSERT OF SPADE DRILL)

- Diameter range: 9.5~65 mm.
- Drilling accuracy: IT10~IT11.
- HPM10-Powder HSS for steel with hardness below HB400.

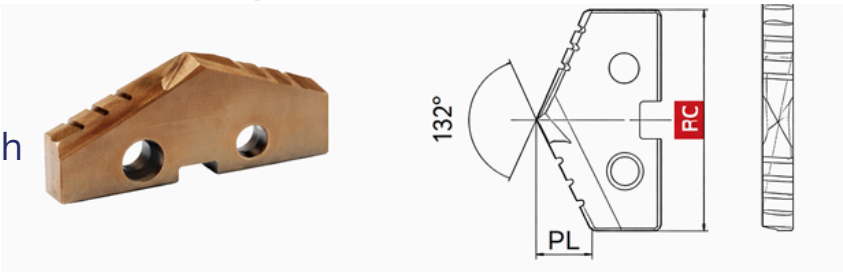

HSS HPC

(Unit): mm

MODEL	SIZE			CONNECTOR	INVENTORY
	DC	PL	T		
SP-3-M0460-25XH	46.00	10.2	6.35	35	▲
SP-3-M0470-25XH	47.00	10.5			▲
SP-4-M0530-25XH	53.00	11.8	7.94	40	▲
SP-4-M0540-25XH	54.00	12.0			▲
SP-4-M0550-25XH	55.00	12.2			▲
SP-4-M0560-25XH	56.00	12.5	7.94	45	▲
SP-4-M0570-25XH	57.00	12.7			▲
SP-4-M0580-25XH	58.00	12.9			▲
SP-4-M0590-25XH	59.00	13.1			▲
SP-4-M0600-25XH	60.00	13.4			▲
SP-4-M0610-25XH	61.00	13.6			▲
SP-4-M0620-25XH	62.00	13.8			▲
SP-4-M0630-25XH	63.00	14.0			▲
SP-4-M0640-25XH	64.00	14.2			▲
SP-4-M0650-25XH	65.00	14.5			▲

APPLICABLE TABLE OF PROCESSED MATERIALS

ISO	P	P	P	P	M	K	K	N	N	N	S	S	H	H
WORKPIECE MATERIAL	MLID STEEL	STRUCTURSL STEEL	ALLOR STEEL	TOOL STEEL	STAINLESS STEEL	CASTIRON	MALLEABLE CAST IRON	ALUMINUM ALLOY	CAST ALUMINUM ALLOYS	COPPER ALLOYS	SUPER ALLOYS	TITANIUM ALLOYS	HARDENED STEEL	HARDENED STEEL
	<500N	<750N	<1400N	<1100N	<900N	<750N	<1100N	Si<12%	Si>12%	<750N	<1100N	<1100N	<1400N	<1600N
25XH	●	●	●	●	●	●	●	○	○	○	○	○	●	

NAMOH TOOLINGS

WE LISTEN WE INNOVATE

SP-*-50XH (CARBIDE INSERT OF SPADE DRILL)

- Diameter range: 9.5~35.0 mm.
- Drilling accuracy: IT10~IT11.

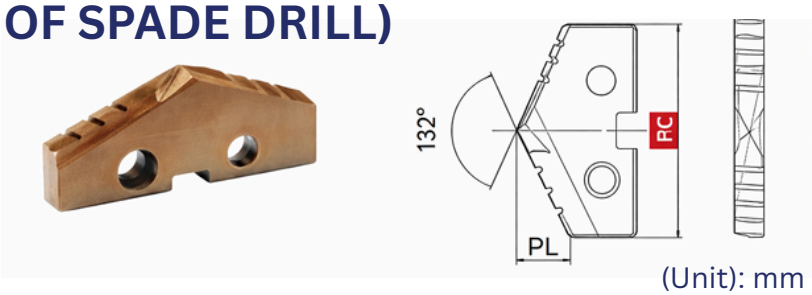

Carbide | mincro grain | HPC

(Unit): mm

MODEL	SIZE			CONNECTOR	INVENTORY
	DC	PL	T		
SP-Y-M0095-50XH	9.50	2.1	2.38	Y0	▲
SP-Y-M0098-50XH	9.80	2.2			▲
SP-Y-M0100-50XH	10.00	2.2			▲
SP-Y-M0102-50XH	10.20	2.3			▲
SP-Y-M0105-50XH	10.50	2.3			▲
SP-Y-M0108-50XH	10.80	2.4			▲
SP-Y-M0110-50XH	11.00	2.4			▲
SP-Z-M0115-50XH	11.50	2.6	2.38	Z0	▲
SP-Z-M0120-50XH	12.00	2.7			▲
SP-Z-M0125-50XH	12.50	2.8			▲
SP-0-M0130-50XH	13.00	2.9	3.18	00	▲
SP-0-M0135-50XH	13.50	3.0			▲
SP-0-M0140-50XH	14.00	3.1			▲
SP-0-M0145-50XH	14.50	3.2			▲
SP-0-M0150-50XH	15.00	3.3			▲
SP-0-M0155-50XH	15.50	3.5	3.18	05	▲
SP-0-M0160-50XH	16.00	3.6			▲
SP-0-M0165-50XH	16.50	3.7			▲
SP-0-M0170-50XH	17.00	3.8			▲
SP-0-M0175-50XH	17.50	3.9			▲
SP-1-M0180-50XH	18.00	4.0	3.97	10	▲
SP-1-M0185-50XH	18.50	4.1			▲
SP-1-M0190-50XH	19.00	4.2			▲
SP-1-M0195-50XH	19.50	4.3			▲
SP-1-M0200-50XH	20.00	4.5			▲
SP-1-M0205-50XH	20.50	4.6			▲
SP-1-M0210-50XH	21.00	4.7			▲
SP-1-M0215-50XH	21.50	4.8			▲

MODEL	SIZE			CONNECTOR	INVENTORY
	DC	PL	T		
SP-1-M0220-50XH	22.00	4.9	3.97	15	▲
SP-1-M0230-50XH	23.00	5.1			▲
SP-1-M0240-50XH	24.00	5.3			▲
SP-2-M0250-50XH	25.00	5.6	4.76	20	▲
SP-2-M0260-50XH	26.00	5.8			▲
SP-2-M0270-50XH	27.00	6.0			▲
SP-2-M0280-50XH	28.00	6.2			▲
SP-2-M0290-50XH	29.00	6.5			▲
SP-2-M0300-50XH	30.00	6.7	4.76	25	▲
SP-2-M0310-50XH	31.00	6.9			▲
SP-2-M0320-50XH	32.00	7.1			▲
SP-2-M0330-50XH	33.00	7.3			▲
SP-2-M0340-50XH	34.00	7.6			▲
SP-2-M0350-50XH	35.00	7.8			▲
SP-3-M0360-50XH	36.00	8.0	6.35	30	▲
SP-3-M0370-50XH	37.00	8.2			▲
SP-3-M0380-50XH	38.00	8.5			▲
SP-3-M0390-50XH	39.00	8.7			▲
SP-3-M0400-50XH	40.00	8.9			▲
SP-3-M0410-50XH	41.00	9.1			▲
SP-3-M0420-50XH	42.00	9.3	6.35	35	▲
SP-3-M0430-50XH	43.00	9.6			▲
SP-3-M0440-50XH	44.00	9.8			▲
SP-3-M0450-50XH	45.00	10.0			▲
SP-3-M0460-50XH	46.00	10.2			▲
SP-3-M0470-50XH	47.00	10.5			▲

APPLICABLE TABLE OF PROCESSED MATERIALS

ISO	P	P	P	P	M	K	K	N	N	N	S	S	H	H
WORKPIECE MATERIAL	MLID STEEL	STRUCTURSL STEEL	ALLOR STEEL	TOOL STEEL	STAINLESS STEEL	CASTIRON	MALLEABLE CAST IRON	ALUMINUM ALLOY	CAST ALUMINUM ALLOYS	COPPER ALLOYS	SUPER ALLOYS	TITANIUM ALLOYS	HARDENED STEEL	HARDENED STEEL
	<500N	<750N	<1400N	<1100N	<900N	<750N	<1100N	Si<12%	Si>12%	<750N	<1100N	<1100N	<1400N	<1600N
50XH	●	●	●	●	●	○	○	○	○	○	●	●	●	

NAMOH TOOLINGS

WE LISTEN WE INNOVATE

SP-*-50CH (CARBIDE INSERT OF SPADE DRILL)

- Diameter range: 9.5~35.0 mm.
- Drilling accuracy: IT10~IT11.

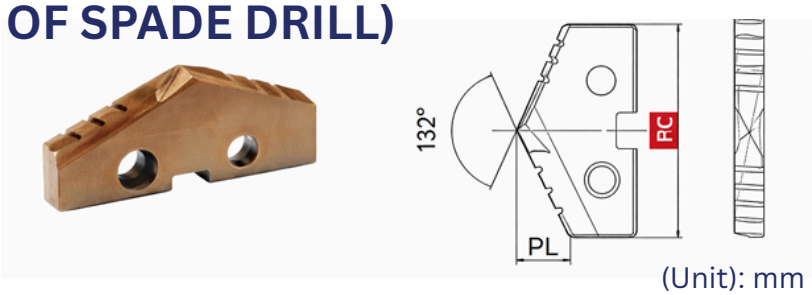

Carbide | mincro grain | HPC

(Unit): mm

MODEL	SIZE			CONNECTOR	INVENTORY
	DC	PL	T		
SP-Y-M0095-50CH	9.50	2.1	2.38	Y0	▲
SP-Y-M0098-50CH	9.80	2.2			▲
SP-Y-M0100-50CH	10.00	2.2			▲
SP-Y-M0102-50CH	10.20	2.3			▲
SP-Y-M0105-50CH	10.50	2.3			▲
SP-Y-M0108-50CH	10.80	2.4			▲
SP-Y-M0110-50CH	11.00	2.4			▲
SP-Z-M0115-50CH	11.50	2.6	2.38	Z0	▲
SP-Z-M0120-50CH	12.00	2.7			▲
SP-Z-M0125-50CH	12.50	2.8			▲
SP-0-M0130-50CH	13.00	2.9	3.18	00	▲
SP-0-M0135-50CH	13.50	3.0			▲
SP-0-M0140-50CH	14.00	3.1			▲
SP-0-M0145-50CH	14.50	3.2			▲
SP-0-M0150-50CH	15.00	3.3			▲
SP-0-M0155-50CH	15.50	3.5	3.18	05	▲
SP-0-M0160-50CH	16.00	3.6			▲
SP-0-M0165-50CH	16.50	3.7			▲
SP-0-M0170-50CH	17.00	3.8			▲
SP-0-M0175-50CH	17.50	3.9			▲
SP-1-M0180-50CH	18.00	4.0	3.97	10	▲
SP-1-M0185-50CH	18.50	4.1			▲
SP-1-M0190-50CH	19.00	4.2			▲
SP-1-M0195-50CH	19.50	4.3			▲
SP-1-M0200-50CH	20.00	4.5			▲
SP-1-M0205-50CH	20.50	4.6			▲
SP-1-M0210-50CH	21.00	4.7			▲
SP-1-M0215-50CH	21.50	4.8			▲

MODEL	SIZE			CONNECTOR	INVENTORY
	DC	PL	T		
SP-1-M0220-50CH	22.00	4.9	3.97	15	▲
SP-1-M0230-50CH	23.00	5.1			▲
SP-1-M0240-50CH	24.00	5.3			▲
SP-2-M0250-50CH	25.00	5.6	4.76	20	▲
SP-2-M0260-50CH	26.00	5.8			▲
SP-2-M0270-50CH	27.00	6.0			▲
SP-2-M0280-50CH	28.00	6.2			▲
SP-2-M0290-50CH	29.00	6.5			▲
SP-2-M0300-50CH	30.00	6.7	4.76	25	▲
SP-2-M0310-50CH	31.00	6.9			▲
SP-2-M0320-50CH	32.00	7.1			▲
SP-2-M0330-50CH	33.00	7.3			▲
SP-2-M0340-50CH	34.00	7.6			▲
SP-2-M0350-50CH	35.00	7.8			▲
SP-3-M0360-50CH	36.00	8.0	6.35	30	▲
SP-3-M0370-50CH	37.00	8.2			▲
SP-3-M0380-50CH	38.00	8.5			▲
SP-3-M0390-50CH	39.00	8.7			▲
SP-3-M0400-50CH	40.00	8.9			▲
SP-3-M0410-50CH	41.00	9.1			▲
SP-3-M0420-50CH	42.00	9.3	6.35	35	▲
SP-3-M0430-50CH	43.00	9.6			▲
SP-3-M0440-50CH	44.00	9.8			▲
SP-3-M0450-50CH	45.00	10.0			▲
SP-3-M0460-50CH	46.00	10.2			▲
SP-3-M0470-50CH	47.00	10.5			▲

APPLICABLE TABLE OF PROCESSED MATERIALS

ISO	P	P	P	P	M	K	K	N	N	N	S	S	H	H
WORKPIECE MATERIAL	MLID STEEL	STRUCTURSL STEEL	ALLOR STEEL	TOOL STEEL	STAINLESS STEEL	CASTIRON	MALLEABLE CAST IRON	ALUMINUM ALLOY	CAST ALUMINUM ALLOYS	COPPER ALLOYS	SUPER ALLOYS	TITANIUM ALLOYS	HARDENED STEEL	HARDENED STEEL
	<500N	<750N	<1400N	<1100N	<900N	<750N	<1100N	Si<12%	Si>12%	<750N	<1100N	<1100N	<1400N	<1600N
50CH	○	○	○			●	●	○	○					

NAMOH TOOLINGS

WE LISTEN WE INNOVATE

SP-*-50SC (CARBIDE INSERT OF SPADE DRILL)

- Diameter range: 9.5~35.0 mm.
- Drilling accuracy: IT10~IT11.

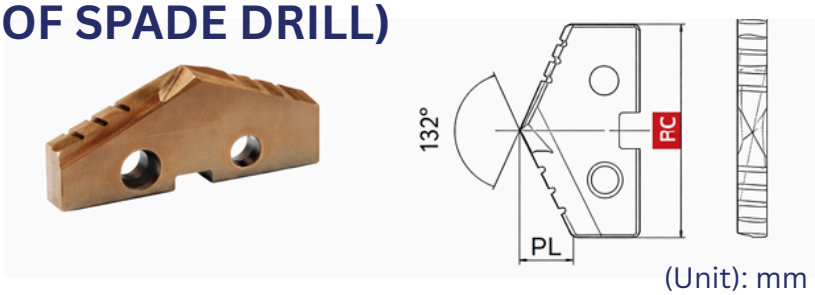

Carbide | mincro grain | HPC

(Unit): mm

MODEL	SIZE			CONNECTOR	INVENTORY
	DC	PL	T		
SP-Y-M0095-50SC	9.50	2.1	2.38	Y0	▲
SP-Y-M0098-50SC	9.80	2.2			▲
SP-Y-M0100-50SC	10.00	2.2			▲
SP-Y-M0102-50SC	10.20	2.3			▲
SP-Y-M0105-50SC	10.50	2.3			▲
SP-Y-M0108-50SC	10.80	2.4			▲
SP-Y-M0110-50SC	11.00	2.4			▲
SP-Z-M0115-50SC	11.50	2.6	2.38	Z0	▲
SP-Z-M0120-50SC	12.00	2.7			▲
SP-Z-M0125-50SC	12.50	2.8			▲
SP-0-M0130-50SC	13.00	2.9	3.18	00	▲
SP-0-M0135-50SC	13.50	3.0			▲
SP-0-M0140-50SC	14.00	3.1			▲
SP-0-M0145-50SC	14.50	3.2			▲
SP-0-M0150-50SC	15.00	3.3			▲
SP-0-M0155-50SC	15.50	3.5	3.18	05	▲
SP-0-M0160-50SC	16.00	3.6			▲
SP-0-M0165-50SC	16.50	3.7			▲
SP-0-M0170-50SC	17.00	3.8			▲
SP-0-M0175-50SC	17.50	3.9			▲
SP-1-M0180-50SC	18.00	4.0	3.97	10	▲
SP-1-M0185-50SC	18.50	4.1			▲
SP-1-M0190-50SC	19.00	4.2			▲
SP-1-M0195-50SC	19.50	4.3			▲
SP-1-M0200-50SC	20.00	4.5			▲
SP-1-M0205-50SC	20.50	4.6			▲
SP-1-M0210-50SC	21.00	4.7			▲
SP-1-M0215-50SC	21.50	4.8			▲

MODEL	SIZE			CONNECTOR	INVENTORY
	DC	PL	T		
SP-1-M0220-50SC	22.00	4.9	3.97	15	▲
SP-1-M0230-50SC	23.00	5.1			▲
SP-1-M0240-50SC	24.00	5.3			▲
SP-2-M0250-50SC	25.00	5.6	4.76	20	▲
SP-2-M0260-50SC	26.00	5.8			▲
SP-2-M0270-50SC	27.00	6.0			▲
SP-2-M0280-50SC	28.00	6.2			▲
SP-2-M0290-50SC	29.00	6.5			▲
SP-2-M0300-50SC	30.00	6.7	4.76	25	▲
SP-2-M0310-50SC	31.00	6.9			▲
SP-2-M0320-50SC	32.00	7.1			▲
SP-2-M0330-50SC	33.00	7.3			▲
SP-2-M0340-50SC	34.00	7.6			▲
SP-2-M0350-50SC	35.00	7.8			▲
SP-3-M0360-50SC	36.00	8.0	6.35	30	▲
SP-3-M0370-50SC	37.00	8.2			▲
SP-3-M0380-50SC	38.00	8.5			▲
SP-3-M0390-50SC	39.00	8.7			▲
SP-3-M0400-50SC	40.00	8.9			▲
SP-3-M0410-50SC	41.00	9.1			▲
SP-3-M0420-50SC	42.00	9.3	6.35	35	▲
SP-3-M0430-50SC	43.00	9.6			▲
SP-3-M0440-50SC	44.00	9.8			▲
SP-3-M0450-50SC	45.00	10.0			▲
SP-3-M0460-50SC	46.00	10.2			▲
SP-3-M0470-50SC	47.00	10.5			▲

APPLICABLE TABLE OF PROCESSED MATERIALS

ISO	P	P	P	P	M	K	K	N	N	N	S	S	H	H
WORKPIECE MATERIAL	MLID STEEL	STRUCTURSL STEEL	ALLOR STEEL	TOOL STEEL	STAINLESS STEEL	CASTIRON	MALLEABLE CAST IRON	ALUMINUM ALLOY	CAST ALUMINUM ALLOYS	COPPER ALLOYS	SUPER ALLOYS	TITANIUM ALLOYS	HARDENED STEEL	HARDENED STEEL
	<500N	<750N	<1400N	<1100N	<900N	<750N	<1100N	Si<12%	Si>12%	<750N	<1100N	<1100N	<1400N	<1600N
50SC								●	●	●	○	○		

NAMOH TOOLINGS

WE LISTEN WE INNOVATE

SP-*-10XH (HSS INSERT OF SPADE DRILL)

- Diameter range: 9/16"~4-1/2".
- Drilling accuracy: IT10~IT11.
- HPM10-Powder HSS for steel with hardness below HB275.

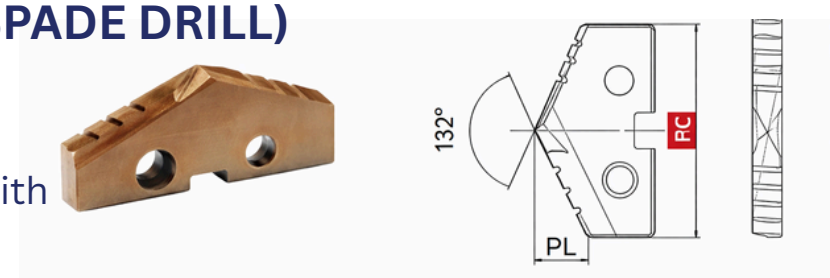

HSS | HPC | Inch

(Unit): inch

MODEL	SIZE				CONNECTOR	INVENTORY	MODEL	SIZE				CONNECTOR	INVENTORY
	DC		PL	T				DC		PL	T		
SP-0-I0562-10XH	9/16"	14.29	0.126	1/8" (3.18)	00	▲	SP-4-I1937-10XH	1-15/16“	49.21	0.433	5/16"(7.94)	40	▲
SP-0-I0625-10XH	5/8"	15.88	0.138	1/8" (3.18)	05	▲	SP-4-I2000-10XH	2“	50.80	0.445			▲
SP-0-I0687-10XH	11/16"	17.46	0.154			▲	SP-4-I2062-10XH	2-1/16“	52.39	0.461			▲
SP-1-I0750-10XH	3/4“	19.05	0.165	5/32"(3.97)	10	▲	SP-4-I2125-10XH	2-1/8“	53.98	0.472			▲
SP-1-I0812-10XH	13/16“	20.64	0.181			▲	SP-4-I2187-10XH	2-3/16“	55.56	0.488			▲
SP-1-I0875-10XH	7/8“	22.23	0.193	5/32"(3.97)	15	▲	SP-4-I2250-10XH	2-1/4“	57.15	0.5	5/16"(7.94)	45	▲
SP-1-I0937-10XH	15/16“	23.81	0.209			▲	SP-4-I2312-10XH	2-5/16“	58.74	0.516			▲
SP-2-I1000-10XH	1“	25.40	0.224	3/16"(4.76)	20	▲	SP-4-I2375-10XH	2-3/8“	60.33	0.528			▲
SP-2-I1062-10XH	1-1/16“	26.99	0.236			▲	SP-4-I2437-10XH	2-7/16“	61.91	0.543			▲
SP-2-I1125-10XH	1-1/8“	28.58	0.252			▲	SP-4-I2500-10XH	2-1/2“	63.50	0.555			▲
SP-2-I1187-10XH	1-3/16“	30.16	0.264	3/16"(4.76)	25	▲	SP-4-I2562-10XH	2-9/16“	65.09	0.571			▲
SP-2-I1250-10XH	1-1/4“	31.75	0.28			▲	SP-5-I2500-10XH	2-1/2“	63.50	0.406	7/16"(11.11)	50	▲
SP-2-I1312-10XH	1-5/16“	33.34	0.291			▲	SP-5-I2562-10XH	2-9/16“	65.09	0.417			▲
SP-2-I1343-10XH	1-11/32“	34.13	0.299			▲	SP-5-I2625-10XH	2-5/8“	66.68	0.425			▲
SP-2-I1375-10XH	1-3/8“	34.93	0.307			▲	SP-5-I2812-10XH	2-13/16“	71.44	0.457			▲
SP-3-I1437-10XH	1-7/16“	36.51	0.319	1/4"(6.35)	30	▲	SP-5-I2875-10XH	2-7/8“	73.03	0.469			▲
SP-3-I1500-10XH	1-1/2“	38.10	0.335			▲	SP-5-I2937-10XH	2-15/16“	74.61	0.476			▲
SP-3-I1562-10XH	1-9/16“	39.69	0.346			▲	SP-5-I3000-10XH	3“	76.20	0.488			▲
SP-3-I1625-10XH	1-5/8“	41.28	0.362			▲	SP-5-I3031-10XH	3-1/32“	76.99	0.492			▲
SP-3-I1687-10XH	1-1/16“	42.68	0.374	1/4"(6.35)	35	▲	SP-6-I3062-10XH	3-1/16“	77.79	0.496	7/16"(11.11)	55	▲
SP-3-I1750-10XH	1-3/4“	44.45	0.390			▲	SP-6-I3125-10XH	3-1/8“	79.38	0.508			▲
SP-3-I1812-10XH	1-13/16“	46.04	0.402			▲	SP-6-I3187-10XH	3-3/16“	80.96	0.52			▲
SP-3-I1875-10XH	1-7/8“	47.63	0.417			▲	SP-6-I3250-10XH	3-1/4“	82.55	0.528			▲

APPLICABLE TABLE OF PROCESSED MATERIALS

ISO	P	P	P	P	M	K	K	N	N	N	S	S	H	H
WORKPIECE MATERIAL	MLID STEEL	STRUCTURSL STEEL	ALLOR STEEL	TOOL STEEL	STAINLESS STEEL	CASTIRON	MALLEABLE CAST IRON	ALUMINUM ALLOY	CAST ALUMINUM ALLOYS	COPPER ALLOYS	SUPER ALLOYS	TITANIUM ALLOYS	HARDENED STEEL	HARDENED STEEL
	<500N	<750N	<1400N	<1100N	<900N	<750N	<1100N	Si<12%	Si>12%	<750N	<1100N	<1100N	<1400N	<1600N
10XH	●	●	○	○	○	○		○	○	○				

NAMOH TOOLINGS

WE LISTEN WE INNOVATE

SP-*-10XH (HSS INSERT OF SPADE DRILL)

- Diameter range: 9/16"~4-1/2".
- Drilling accuracy: IT10~IT11.
- HPM10-Powder HSS for steel with hardness below HB275.

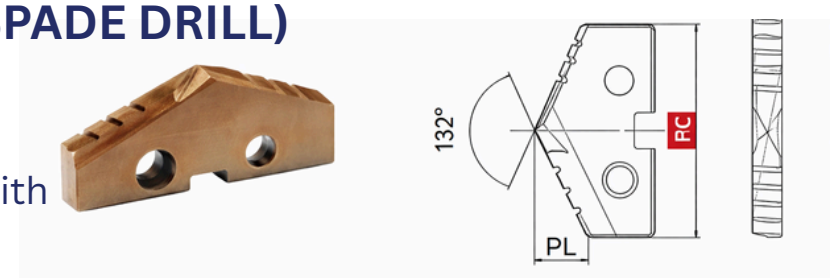

HSS | HPC | Inch

(Unit): inch

MODEL	SIZE				CONNECTOR	INVENTORY
	DC		PL	T		
SP-6-I3312-10XH	3-5/16“	84.14	0.539	7/16"(11.11)	55	▲
SP-6-I3375-10XH	3-3/8“	85.73	0.547			▲
SP-6-I3437-10XH	3-7/16“	87.31	0.559			▲
SP-6-I3500-10XH	3-1/2“	88.90	0.567			▲
SP-7-I3531-10XH	3-17/32“	89.96	0.575	7/16"(11.11)	70	▲
SP-7-I3562-10XH	3-9/16“	90.49	0.579			▲
SP-7-I3625-10XH	3-5/8“	92.08	0.591			▲
SP-7-I3687-10XH	3-11/16“	93.66	0.598			▲
SP-7-I3750-10XH	3-3/4“	95.25	0.61			▲
SP-7-I3812-10XH	3-13/16“	96.84	0.618			▲
SP-7-I3875-10XH	3-7/8“	98.43	0.63			▲
SP-7-I3937-10XH	3-15/16“	100.01	0.638			▲
SP-7-I4000-10XH	4“	101.60	0.65			▲
SP-8-I4125-10XH	4-1/8“	104.78	0.669	7/16"(11.11)	80	▲
SP-8-I4250-10XH	4-1/4“	107.95	0.689			▲
SP-8-I4500-10XH	4-1/2“	114.30	0.732			▲

APPLICABLE TABLE OF PROCESSED MATERIALS

ISO	P	P	P	P	M	K	K	N	N	N	S	S	H	H
WORKPIECE MATERIAL	MLID STEEL	STRUCTURSL STEEL	ALLOR STEEL	TOOL STEEL	STAINLESS STEEL	CASTIRON	MALLEABLE CAST IRON	ALUMINUM ALLOY	CAST ALUMINUM ALLOYS	COPPER ALLOYS	SUPER ALLOYS	TITANIUM ALLOYS	HARDENED STEEL	HARDENED STEEL
	<500N	<750N	<1400N	<1100N	<900N	<750N	<1100N	Si<12%	Si>12%	<750N	<1100N	<1100N	<1400N	<1600N
10XH	●	●	○	○	○	○		○	○	○				

NAMOH TOOLINGS

WE LISTEN WE INNOVATE

SP-*-15XH (HSS INSERT OF SPADE DRILL)

- Diameter range: 9/16"~4-1/2".
- Drilling accuracy: IT10~IT11.
- HPM15-Powder HSS for steel with hardness below HB350.

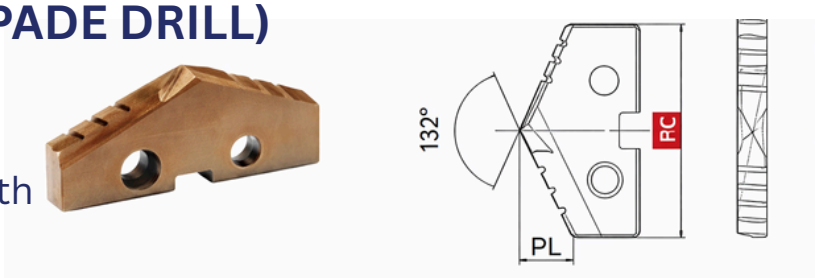

HSS | HPC | Inch

(Unit): inch

MODEL	SIZE				CONNECTOR	INVENTORY
	DC		PL	T		
SP-0-I0562-15XH	9/16"	14.29	0.126	1/8" (3.18)	00	▲
SP-0-I0625-15XH	5/8"	15.88	0.138	1/8" (3.18)	05	▲
SP-0-I0687-15XH	11/16"	17.46	0.154			▲
SP-1-I0750-15XH	3/4“	19.05	0.165	5/32"(3.97)	10	▲
SP-1-I0812-15XH	13/16“	20.64	0.181			▲
SP-1-I0875-15XH	7/8“	22.23	0.193	5/32"(3.97)	15	▲
SP-1-I0937-15XH	15/16“	23.81	0.209			▲
SP-2-I1000-15XH	1“	25.40	0.224	3/16"(4.76)	20	▲
SP-2-I1062-15XH	1-1/16“	26.99	0.236			▲
SP-2-I1125-15XH	1-1/8“	28.58	0.252			▲
SP-2-I1187-15XH	1-3/16“	30.16	0.264	3/16"(4.76)	25	▲
SP-2-I1250-15XH	1-1/4“	31.75	0.28			▲
SP-2-I1312-15XH	1-5/16“	33.34	0.291			▲
SP-2-I1343-15XH	1-11/32“	34.13	0.299			▲
SP-2-I1375-15XH	1-3/8“	34.93	0.307			▲
SP-3-I1437-15XH	1-7/16“	36.51	0.319	1/4"(6.35)	30	▲
SP-3-I1500-15XH	1-1/2“	38.10	0.335			▲
SP-3-I1562-15XH	1-9/16“	39.69	0.346			▲
SP-3-I1625-15XH	1-5/8“	41.28	0.362			▲
SP-3-I1687-15XH	1-1/16“	42.68	0.374	1/4"(6.35)	35	▲
SP-3-I1750-15XH	1-3/4“	44.45	0.390			▲
SP-3-I1812-15XH	1-13/16“	46.04	0.402			▲
SP-3-I1875-15XH	1-7/8“	47.63	0.417			▲

MODEL	SIZE				CONNECTOR	INVENTORY
	DC		PL	T		
SP-4-I1937-15XH	1-15/16“	49.21	0.433	5/16"(7.94)	40	▲
SP-4-I2000-15XH	2“	50.80	0.445			▲
SP-4-I2062-15XH	2-1/16“	52.39	0.461			▲
SP-4-I2125-15XH	2-1/8“	53.98	0.472			▲
SP-4-I2187-15XH	2-3/16“	55.56	0.488			▲
SP-4-I2250-15XH	2-1/4“	57.15	0.5	5/16"(7.94)	45	▲
SP-4-I2312-15XH	2-5/16“	58.74	0.516			▲
SP-4-I2375-15XH	2-3/8“	60.33	0.528			▲
SP-4-I2437-15XH	2-7/16“	61.91	0.543			▲
SP-4-I2500-15XH	2-1/2“	63.50	0.555			▲
SP-4-I2562-15XH	2-9/16“	65.09	0.571			▲
SP-5-I2500-15XH	2-1/2“	63.50	0.406	7/16"(11.11)	50	▲
SP-5-I2562-15XH	2-9/16	65.09	0.417			▲
SP-5-I2625-15XH	2-5/8“	66.68	0.425			▲
SP-5-I2812-15XH	2-13/16“	71.44	0.457			▲
SP-5-I2875-15XH	2-7/8“	73.03	0.469			▲
SP-5-I2937-15XH	2-15/16“	74.61	0.476			▲
SP-5-I3000-15XH	3“	76.20	0.488			▲
SP-5-I3031-15XH	3-1/32“	76.99	0.492			▲
SP-6-I3062-15XH	3-1/16“	77.79	0.496	7/16"(11.11)	55	▲
SP-6-I3125-15XH	3-1/8“	79.38	0.508			▲
SP-6-I3187-15XH	3-3/16“	80.96	0.52			▲
SP-6-I3250-15XH	3-1/4“	82.55	0.528			▲

APPLICABLE TABLE OF PROCESSED MATERIALS

ISO	P	P	P	P	M	K	K	N	N	N	S	S	H	H
WORKPIECE MATERIAL	MLID STEEL	STRUCTURSL STEEL	ALLOR STEEL	TOOL STEEL	STAINLESS STEEL	CASTIRON	MALLEABLE CAST IRON	ALUMINUM ALLOY	CAST ALUMINUM ALLOYS	COPPER ALLOYS	SUPER ALLOYS	TITANIUM ALLOYS	HARDENED STEEL	HARDENED STEEL
	<500N	<750N	<1400N	<1100N	<900N	<750N	<1100N	Si<12%	Si>12%	<750N	<1100N	<1100N	<1400N	<1600N
15XH	●	●	●	●	●	○	○	○	○	○	○			

NAMOH TOOLINGS

WE LISTEN WE INNOVATE

SP-*-15XH (HSS INSERT OF SPADE DRILL)

- Diameter range: 9.5~35.0 mm.
- Drilling accuracy: IT10~IT11.
- HPM15-Powder HSS for steel with hardness below HB350.

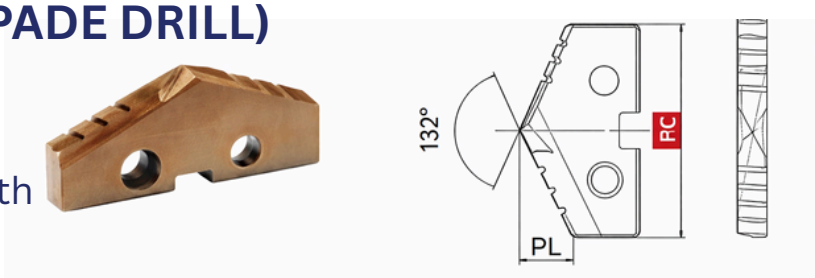

HSS | HPC | Inch

(Unit): inch

MODEL	SIZE				CONNECTOR	INVENTORY
	DC		PL	T		
SP-6-I3312-15XH	3-5/16“	84.14	0.539	7/16"(11.11)	55	▲
SP-6-I3375-15XH	3-3/8“	85.73	0.547			▲
SP-6-I3437-15XH	3-7/16“	87.31	0.559			▲
SP-6-I3500-15XH	3-1/2“	88.90	0.567			▲
SP-7-I3531-15XH	3-17/32“	89.96	0.575	7/16"(11.11)	70	▲
SP-7-I3562-15XH	3-9/16“	90.49	0.579			▲
SP-7-I3625-15XH	3-5/8“	92.08	0.591			▲
SP-7-I3687-15XH	3-11/16“	93.66	0.598			▲
SP-7-I3750-15XH	3-3/4“	95.25	0.61			▲
SP-7-I3812-15XH	3-13/16“	96.84	0.618			▲
SP-7-I3875-15XH	3-7/8“	98.43	0.63			▲
SP-7-I3937-15XH	3-15/16“	100.01	0.638			▲
SP-7-I4000-15XH	4“	101.60	0.65			▲
SP-8-I4125-15XH	4-1/8“	104.78	0.669	7/16"(11.11)	80	▲
SP-8-I4250-15XH	4-1/4“	107.95	0.689			▲
SP-8-I4500-15XH	4-1/2“	114.30	0.732			▲

APPLICABLE TABLE OF PROCESSED MATERIALS

ISO	P	P	P	P	M	K	K	N	N	N	S	S	H	H
WORKPIECE MATERIAL	MLID STEEL	STRUCTURSL STEEL	ALLOR STEEL	TOOL STEEL	STAINLESS STEEL	CASTIRON	MALLEABLE CAST IRON	ALUMINUM ALLOY	CAST ALUMINUM ALLOYS	COPPER ALLOYS	SUPER ALLOYS	TITANIUM ALLOYS	HARDENED STEEL	HARDENED STEEL
	<500N	<750N	<1400N	<1100N	<900N	<750N	<1100N	Si<12%	Si>12%	<750N	<1100N	<1100N	<1400N	<1600N
15XH	●	●	●	●	●	○	○	○	○	○	○			

NAMOH TOOLINGS

WE LISTEN WE INNOVATE

SP-*-25XH (HSS INSERT OF SPADE DRILL)

- Diameter range: 3/8"~2-9/16".
- Drilling accuracy: IT10~IT11.
- HPM25-Powder HSS for steel with hardness below HB400.

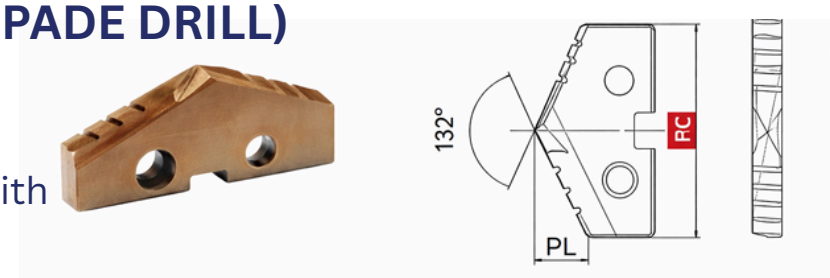

HSS | HPC | Inch

(Unit): inch

MODEL	SIZE				CONNECTOR	INVENTORY
	DC		PL	T		
SP-Y-I0375-25XH	3/8“	9.53	0.083	3/32"(2.38)	Y0	▲
SP-Y-I0421-25XH	27/64“	10.72	0.094			▲
SP-Y-I0437-25XH	7/16“	11.11	0.098			▲
SP-Z-I0453-25XH	29/64"	11.51	0.102	3/32"(2.38)	Z0	▲
SP-Z-I0484-25XH	31/64"	12.30	0.106			▲
SP-Z-I0500-25XH	1/2"	12.70	0.11			▲
SP-0-I0562-25XH	9/16"	14.29	0.126	1/8"(3.18)	00	▲
SP-0-I0625-25XH	5/8"	15.88	0.138	1/8"(3.18)	05	▲
SP-0-I0687-25XH	11/16"	17.46	0.154			▲
SP-1-I0750-25XH	3/4“	19.05	0.165	5/32"(3.97)	10	▲
SP-1-I0812-25XH	13/16“	20.64	0.181			▲
SP-1-I0875-25XH	7/8“	22.23	0.193	5/32"(3.97)	15	▲
SP-1-I0937-25XH	15/16“	23.81	0.209			▲
SP-2-I1000-25XH	1“	25.40	0.224	3/16"(4.76)	20	▲
SP-2-I1062-25XH	1-1/16“	26.99	0.236			▲
SP-2-I1125-25XH	1-1/8“	28.58	0.252			▲
SP-2-I1187-25XH	1-3/16“	30.16	0.264	3/16"(4.76)	25	▲
SP-2-I1250-25XH	1-1/4“	31.75	0.28			▲
SP-2-I1312-25XH	1-5/16“	33.34	0.291			▲
SP-2-I1343-25XH	1-11/32“	34.13	0.299			▲
SP-2-I1375-25XH	1-3/8“	34.93	0.307			▲
SP-3-I1437-25XH	1-7/16“	36.51	0.319	1/4"(6.35)	30	▲
SP-3-I1500-25XH	1-1/2“	38.10	0.335			▲

MODEL	SIZE				CONNECTOR	INVENTORY
	DC		PL	T		
SP-3-I1562-25XH	1-9/16“	39.69	0.346	1/4"(6.35)	30	▲
SP-3-I1625-25XH	1-5/8“	41.28	0.362			▲
SP-3-I1687-25XH	1-1/16“	42.68	0.374	1/4"(6.35)	35	▲
SP-3-I1750-25XH	1-3/4“	44.45	0.39			▲
SP-3-I1812-25XH	1-13/16“	46.04	0.402			▲
SP-3-I1875-25XH	1-7/8“	47.63	0.417			▲
SP-4-I1937-25XH	1-15/16“	49.21	0.433	5/16"(7.94)	40	▲
SP-4-I2000-25XH	2“	50.80	0.445			▲
SP-4-I2062-25XH	2-1/16“	52.39	0.461			▲
SP-4-I2125-25XH	2-1/8“	53.98	0.472			▲
SP-4-I2187-25XH	2-3/16“	55.56	0.488			▲
SP-4-I2250-25XH	2-1/4“	57.15	0.5	5/16"(7.94)	45	▲
SP-4-I2312-25XH	2-5/16“	58.74	0.516			▲
SP-4-I2375-25XH	2-3/8“	60.33	0.528			▲
SP-4-I2437-25XH	2-7/16“	61.91	0.543			▲
SP-4-I2500-25XH	2-1/2“	63.50	0.555			▲
SP-4-I2562-25XH	2-9/16“	65.09	0.571			▲

APPLICABLE TABLE OF PROCESSED MATERIALS

ISO	P	P	P	P	M	K	K	N	N	N	S	S	H	H
WORKPIECE MATERIAL	MLID STEEL	STRUCTURSL STEEL	ALLOR STEEL	TOOL STEEL	STAINLESS STEEL	CASTIRON	MALLEABLE CAST IRON	ALUMINUM ALLOY	CAST ALUMINUM ALLOYS	COPPER ALLOYS	SUPER ALLOYS	TITANIUM ALLOYS	HARDENED STEEL	HARDENED STEEL
	<500N	<750N	<1400N	<1100N	<900N	<750N	<1100N	Si<12%	Si>12%	<750N	<1100N	<1100N	<1400N	<1600N
25XH	●	●	●	●	●	●	●	○	○	○	○	○	●	

NAMOH TOOLINGS

WE LISTEN WE INNOVATE

SP-*-25VH (HSS INSERT OF SPADE DRILL WITH DOUBLE TOP ANGLE)

- Diameter range: 1"~2-11/32".
- Special blade for armor guard plate of construction machinery
- HPM25-Powder HSS for steel with hardness below HB400

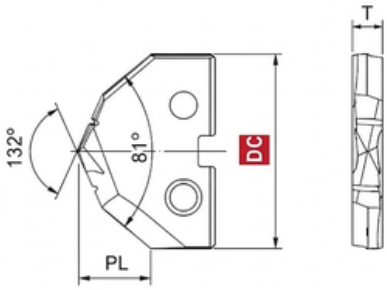

HSS | HPC | Inch

(Unit): inch

MODEL	SIZE				CONNECTOR	INVENTORY
	DC		PL	T		
SP-2-I1000-25VH	1“	25.40	0.366	3/16" (4.76)	20	▲
SP-2-I1187-25VH	1-3/16"	30.16	0.433		25	▲
SP-2-I1344-25VH	1-11/32"	34.13	0.528		25	▲
SP-3-I1562-25VH	1-9/16"	39.69	0.555	1/4" (6.35)	30	▲
SP-3-I1750-25VH	1-3/4"	44.45	0.642		35	▲
SP-4-I2344-25VH	2-11/32"	59.53	0.858	5/16" (7.94)	45	▲

APPLICABLE TABLE OF PROCESSED MATERIALS

ISO	P	P	P	P	M	K	K	N	N	N	S	S	H	H
WORKPIECE MATERIAL	MLID STEEL	STRUCTURSL STEEL	ALLOR STEEL	TOOL STEEL	STAINLESS STEEL	CASTIRON	MALLEABLE CAST IRON	ALUMINUM ALLOY	CAST ALUMINUM ALLOYS	COPPER ALLOYS	SUPER ALLOYS	TITANIUM ALLOYS	HARDENED STEEL	HARDENED STEEL
	<500N	<750N	<1400N	<1100N	<900N	<750N	<1100N	Si<12%	Si>12%	<750N	<1100N	<1100N	<1400N	<1600N
25VH	●	●	○											

NAMOH TOOLINGS

WE LISTEN WE INNOVATE

SP-*-50XH (CARBIDE INSERT OF SPADE DRILL)

- Diameter range: 3/8"~1-3/8"
- Drilling accuracy: IT10~IT11.

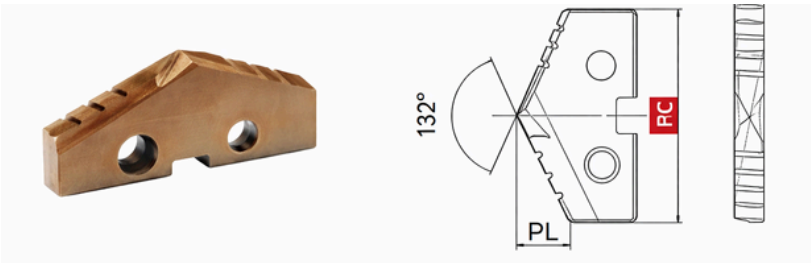

Carbide | mincro grain | HPC | Inch

MODEL	SIZE				CONNECTOR	INVENTORY
	DC		PL	T		
SP-Y-I0375-50XH	3/8“	9.53	0.083	3/32"(2.38)	Y0	▲
SP-Y-I0421-50XH	27/64“	10.72	0.094			▲
SP-Y-I0437-50XH	7/16“	11.11	0.098			▲
SP-Z-I0453-50XH	29/64"	11.51	0.102	3/32"(2.38)	Z0	▲
SP-Z-I0484-50XH	31/64"	12.30	0.106			▲
SP-Z-I0500-50XH	1/2"	12.70	0.11			▲
SP-0-I0562-50XH	9/16"	14.29	0.126	1/8"(3.18)	00	▲
SP-0-I0625-50XH	5/8"	15.88	0.138	1/8"(3.18)	05	▲
SP-0-I0687-50XH	11/16"	17.46	0.154			▲
SP-1-I0750-50XH	3/4“	19.05	0.165	5/32"(3.97)	10	▲
SP-1-I0812-50XH	13/16“	20.64	0.181			▲
SP-1-I0875-50XH	7/8“	22.23	0.193	5/32“(3.97)	15	▲
SP-1-I0937-50XH	15/16“	23.81	0.209			▲
SP-2-I1000-50XH	1“	25.40	0.224	3/16"(4.76)	20	▲
SP-2-I1062-50XH	1-1/16“	26.99	0.236			▲
SP-2-I1125-50XH	1-1/8“	28.58	0.252			▲
SP-2-I1187-50XH	1-3/16“	30.16	0.264	3/16"(4.76)	25	▲
SP-2-I1250-50XH	1-1/4“	31.75	0.28			▲
SP-2-I1312-50XH	1-5/16“	33.34	0.291			▲
SP-2-I1343-50XH	1-11/32“	34.13	0.299			▲
SP-2-I1375-50XH	1-3/8“	34.93	0.307			▲

MODEL	SIZE				CONNECTOR	INVENTORY
	DC		PL	T		
SP-3-I1437-50XH	1-7/16“	36.51	8.1	1/4" (6.35)	30	▲
SP-3-I1500-50XH	1-1/2“	38.10	8.5			▲
SP-3-I1562-50XH	1-9/16“	39.69	8.8			▲
SP-3-I1625-50XH	1-5/8“	41.28	9.2			▲
SP-3-I1687-50XH	1-1/16“	42.68	9.5	1/4" (6.35)	35	▲
SP-3-I1750-50XH	1-3/4“	44.45	9.9			▲
SP-3-I1812-50XH	1-13/16“	46.04	10.2			▲
SP-3-I1875-50XH	1-7/8“	47.63	10.6			▲

APPLICABLE TABLE OF PROCESSED MATERIALS

ISO	P	P	P	P	M	K	K	N	N	N	S	S	H	H
WORKPIECE MATERIAL	MLID STEEL	STRUCTURSL STEEL	ALLOR STEEL	TOOL STEEL	STAINLESS STEEL	CASTIRON	MALLEABLE CAST IRON	ALUMINUM ALLOY	CAST ALUMINUM ALLOYS	COPPER ALLOYS	SUPER ALLOYS	TITANIUM ALLOYS	HARDENED STEEL	HARDENED STEEL
	<500N	<750N	<1400N	<1100N	<900N	<750N	<1100N	Si<12%	Si>12%	<750N	<1100N	<1100N	<1400N	<1600N
50XH	●	●	●	●	●	○	○	○	○	○	●	●	●	

NAMOH TOOLINGS

WE LISTEN WE INNOVATE

SP-*-50CH (CARBIDE INSERT OF SPADE DRILL)

- Diameter range: 3/8"~1-3/8"
- Drilling accuracy: IT10~IT11.

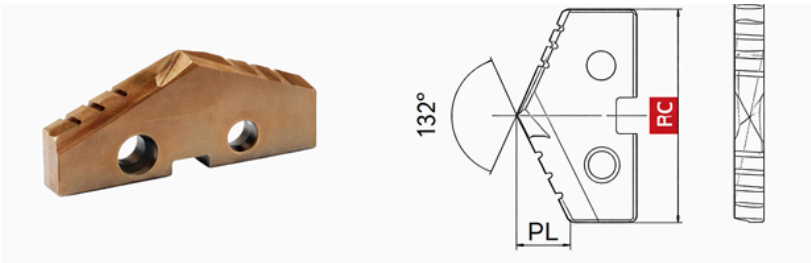

Carbide | mincro grain | HPC | Inch

MODEL	SIZE				CONNECTOR	INVENTORY
	DC		PL	T		
SP-Y-I0375-50CH	3/8“	9.53	0.083	3/32"(2.38)	Y0	▲
SP-Y-I0421-50CH	27/64“	10.72	0.094			▲
SP-Y-I0437-50CH	7/16“	11.11	0.098			▲
SP-Z-I0453-50CH	29/64"	11.51	0.102	3/32"(2.38)	Z0	▲
SP-Z-I0484-50CH	31/64"	12.30	0.106			▲
SP-Z-I0500-50CH	1/2"	12.70	0.11			▲
SP-0-I0562-50CH	9/16"	14.29	0.126	1/8"(3.18)	00	▲
SP-0-I0625-50CH	5/8"	15.88	0.138	1/8"(3.18)	05	▲
SP-0-I0687-50CH	11/16"	17.46	0.154			▲
SP-1-I0750-50CH	3/4“	19.05	0.165	5/32"(3.97)	10	▲
SP-1-I0812-50CH	13/16“	20.64	0.181			▲
SP-1-I0875-50CH	7/8“	22.23	0.193	5/32“(3.97)	15	▲
SP-1-I0937-50CH	15/16“	23.81	0.209			▲
SP-2-I1000-50CH	1“	25.40	0.224	3/16"(4.76)	20	▲
SP-2-I1062-50CH	1-1/16“	26.99	0.236			▲
SP-2-I1125-50CH	1-1/8“	28.58	0.252			▲
SP-2-I1187-50CH	1-3/16“	30.16	0.264	3/16"(4.76)	25	▲
SP-2-I1250-50CH	1-1/4“	31.75	0.28			▲
SP-2-I1312-50CH	1-5/16“	33.34	0.291			▲
SP-2-I1343-50CH	1-11/32“	34.13	0.299			▲
SP-2-I1375-50CH	1-3/8“	34.93	0.307			▲

MODEL	SIZE				CONNECTOR	INVENTORY
	DC		PL	T		
SP-3-I1437-50CH	1-7/16“	36.51	8.1	1/4" (6.35)	30	▲
SP-3-I1500-50CH	1-1/2“	38.10	8.5			▲
SP-3-I1562-50CH	1-9/16“	39.69	8.8			▲
SP-3-I1625-50CH	1-5/8“	41.28	9.2			▲
SP-3-I1687-50CH	1-1/16“	42.68	9.5	1/4" (6.35)	35	▲
SP-3-I1750-50CH	1-3/4“	44.45	9.9			▲
SP-3-I1812-50CH	1-13/16“	46.04	10.2			▲
SP-3-I1875-50CH	1-7/8“	47.63	10.6			▲

APPLICABLE TABLE OF PROCESSED MATERIALS

ISO	P	P	P	P	M	K	K	N	N	N	S	S	H	H
WORKPIECE MATERIAL	MLID STEEL	STRUCTURSL STEEL	ALLOR STEEL	TOOL STEEL	STAINLESS STEEL	CASTIRON	MALLEABLE CAST IRON	ALUMINUM ALLOY	CAST ALUMINUM ALLOYS	COPPER ALLOYS	SUPER ALLOYS	TITANIUM ALLOYS	HARDENED STEEL	HARDENED STEEL
	<500N	<750N	<1400N	<1100N	<900N	<750N	<1100N	Si<12%	Si>12%	<750N	<1100N	<1100N	<1400N	<1600N
50CH	○	○	○			●	●	○	○					

NAMOH TOOLINGS

WE LISTEN WE INNOVATE

SP-*-50SC (CARBIDE INSERT OF SPADE DRILL)

- Diameter range: 3/8"~1-3/8"
- Drilling accuracy: IT10~IT11.

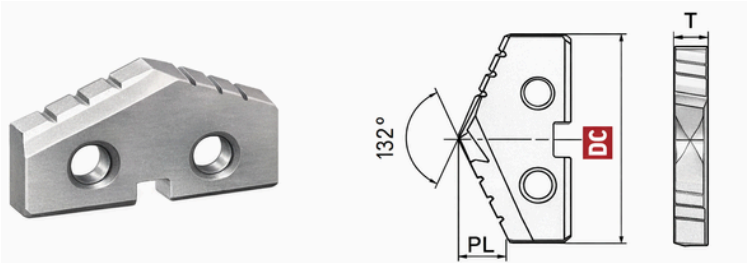

Carbide | mincro grain | HPC | Inch

MODEL	SIZE				CONNECTOR	INVENTORY
	DC		PL	T		
SP-Y-I0375-50SC	3/8“	9.53	0.083	3/32"(2.38)	Y0	▲
SP-Y-I0421-50SC	27/64“	10.72	0.094			▲
SP-Y-I0437-50SC	7/16“	11.11	0.098			▲
SP-Z-I0453-50SC	29/64"	11.51	0.102	3/32"(2.38)	Z0	▲
SP-Z-I0484-50SC	31/64"	12.30	0.106			▲
SP-Z-I0500-50SC	1/2"	12.70	0.11			▲
SP-0-I0562-50SC	9/16"	14.29	0.126	1/8"(3.18)	00	▲
SP-0-I0625-50SC	5/8"	15.88	0.138	1/8"(3.18)	05	▲
SP-0-I0687-50SC	11/16"	17.46	0.154			▲
SP-1-I0750-50SC	3/4“	19.05	0.165	5/32"(3.97)	10	▲
SP-1-I0812-50SC	13/16“	20.64	0.181			▲
SP-1-I0875-50SC	7/8“	22.23	0.193	5/32“(3.97)	15	▲
SP-1-I0937-50SC	15/16“	23.81	0.209			▲
SP-2-I1000-50SC	1“	25.40	0.224	3/16"(4.76)	20	▲
SP-2-I1062-50SC	1-1/16“	26.99	0.236			▲
SP-2-I1125-50SC	1-1/8“	28.58	0.252			▲
SP-2-I1187-50SC	1-3/16“	30.16	0.264	3/16"(4.76)	25	▲
SP-2-I1250-50SC	1-1/4“	31.75	0.28			▲
SP-2-I1312-50SC	1-5/16“	33.34	0.291			▲
SP-2-I1343-50SC	1-11/32“	34.13	0.299			▲
SP-2-I1375-50SC	1-3/8“	34.93	0.307			▲

MODEL	SIZE				CONNECTOR	INVENTORY
	DC		PL	T		
SP-3-I1437-50SC	1-7/16“	36.51	8.1	1/4" (6.35)	30	▲
SP-3-I1500-50SC	1-1/2“	38.10	8.5			▲
SP-3-I1562-50SC	1-9/16“	39.69	8.8			▲
SP-3-I1625-50SC	1-5/8“	41.28	9.2			▲
SP-3-I1687-50SC	1-1/16“	42.68	9.5	1/4" (6.35)	35	▲
SP-3-I1750-50SC	1-3/4“	44.45	9.9			▲
SP-3-I1812-50SC	1-13/16“	46.04	10.2			▲
SP-3-I1875-50SC	1-7/8“	47.63	10.6			▲

APPLICABLE TABLE OF PROCESSED MATERIALS

ISO	P	P	P	P	M	K	K	N	N	N	S	S	H	H
WORKPIECE MATERIAL	MLID STEEL	STRUCTURSL STEEL	ALLOR STEEL	TOOL STEEL	STAINLESS STEEL	CASTIRON	MALLEABLE CAST IRON	ALUMINUM ALLOY	CAST ALUMINUM ALLOYS	COPPER ALLOYS	SUPER ALLOYS	TITANIUM ALLOYS	HARDENED STEEL	HARDENED STEEL
	<500N	<750N	<1400N	<1100N	<900N	<750N	<1100N	Si<12%	Si>12%	<750N	<1100N	<1100N	<1400N	<1600N
50SC								●	●	●	○	○		

NAMOH TOOLINGS

WE LISTEN WE INNOVATE

ACCESSORIES

- OIL RING

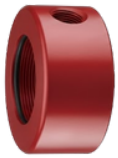

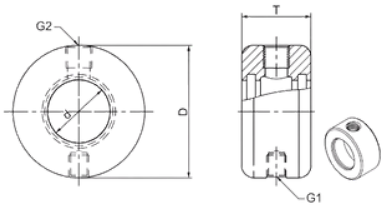

INSERT DIAMETER RANGE	d	D	T	G1	G2	O-RING
	INSIDE DIAMETER	OUTSIDE DIAMETER	THICKNESS	DRIVING ROD THREAD	CODING NOZZLE THREAD	
SH-1905R	19.05	44.45	22.23	M8×1.25	Rc1/8	2104028
SH-2540R	25.40	53.97	28.57	M8×1.25	Rc1/8	2104030
SH-3175R	31.75	63.50	34.92	M10×1.5	Rc1/4	2104026

- DRIVE ROD

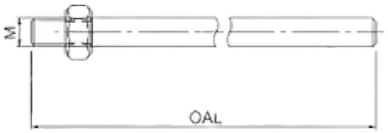

TYPE	M	OAL	MATCHED OIL RING
	THREAD	TOTAL LENGTH	
SG-M8-250	M8×1.25	250	SH-1905R
SG-M8-250	M8×1.25	250	SH-2540R
SG-M10-250	M10×1.5	250	SH-3175R
SG-M10-250	M10×1.5	250	SH-4445R
SG-M12-250	M12×1.75	250	SH-5715R

NAMOH TOOLINGS
WE LISTEN WE INNOVATE

APPLICATION

- **INSERT INSTALLATION**

RECOMMENDED VALUE OF SCREW LOCKING FORCE

RANGE OF DIAMETER	TIGHTENING TORQUE (NM)
9.5--12.5	0.5
13.0--17.5	1.0
18.0--24.5	1.8
25.0--35.5	3.5
36.0--65.0	5.0
66.0--114.0	7.0

INSTALLATION PROCEDURE

1. First, clean the mounting position with an air gun.
2. Properly load the insert into the mounting groove in the holder and slightly push the insert.
3. Fix the insert with the fastening bolt.

- **SCHEMATIC DIAGRAM OF OIL RING ASSEMBLY**

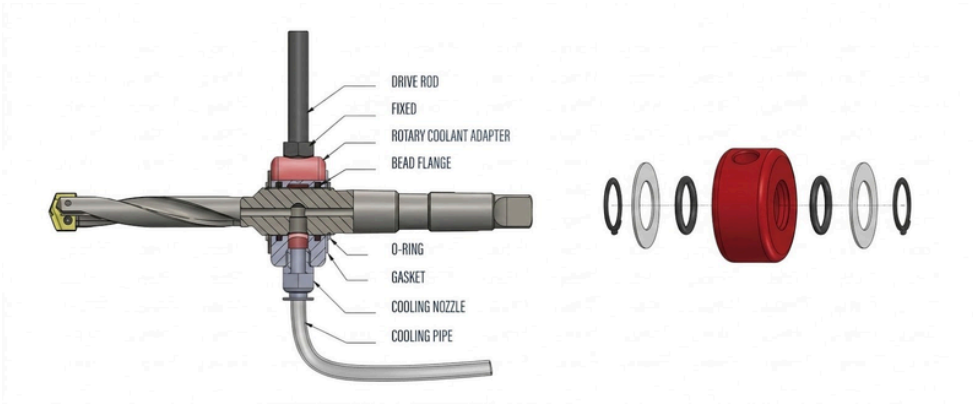

Note: When the series 20N, only one retaining ring is installed.

NAMOH TOOLINGS

WE LISTEN WE INNOVATE

- **PROCESSING CASE I**

1. Work material: ZG20Mn
2. Equipment: Radial drilling machine
3. Coolant: Emulsified liquid (5bar)
4. Bore diameter: 42.0mm
5. Hole depth: 280mm (through hole)
6. Parameter: Vc=33m/min fn=0.25mm/r

Processing efficiency: The twist drill can make 8 holes per hour, the spade drill can make 12 holes per hour, drilling efficiency increased by 50%.

- **PROCESSING CASE 2**

1. Work material: PD3 (HRC32)
2. Equipment: VMC
3. Coolant: Emulsified liquid (5bar)
4. Bore diameter: 31.0mm
5. Hole depth: 17mm (through hole)
6. Parameter: Vc=40m/min fn=0.20mm/r

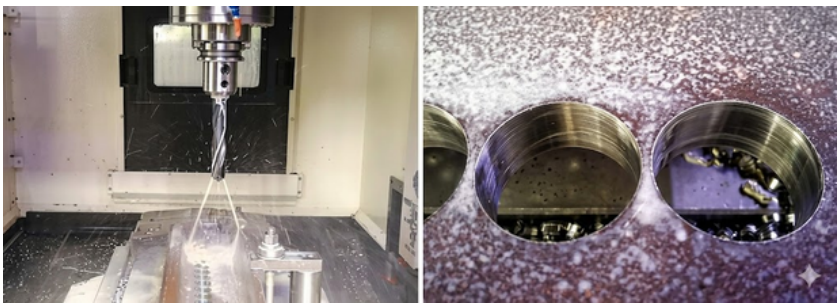

Life time: the twist drill can only finish one hole, but the spade drill can make 80 hole continuously.

- **PROCESSING CASE 3**

1. Work material: Q235
2. Equipment: Radial drilling machine
3. Coolant: Emulsified liquid 1bar (Non –high
4. pressure water pump)
5. Bore diameter: 26.0mm
6. Hole depth: 14mm*4(stack annular cutter)
7. Parameter: Vc=40.8m/min fn=0.20mm/r

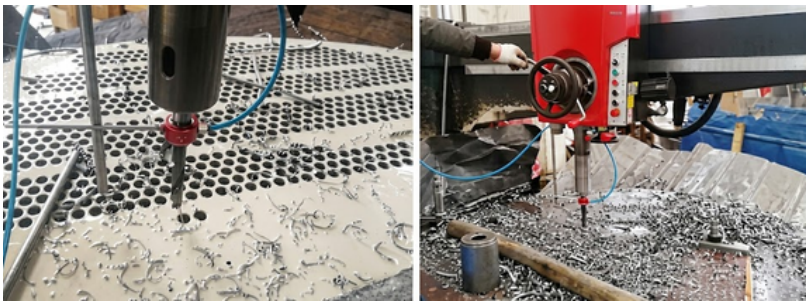

Machining precision: the twist drill machining hole tolerance :H11-H10, the spade drill machining hole tolerance :H9-H10.

NAMOH TOOLINGS
WE LISTEN WE INNOVATE

APPLICATION

- **APPLICATION POINTS AND PRECAUTIONS**

- **INSTALLATION**

Good working condition & reliable clamping are requirements for service life and accuracy of drills.

MAX. RUNOUT AND MISALIGNMENT

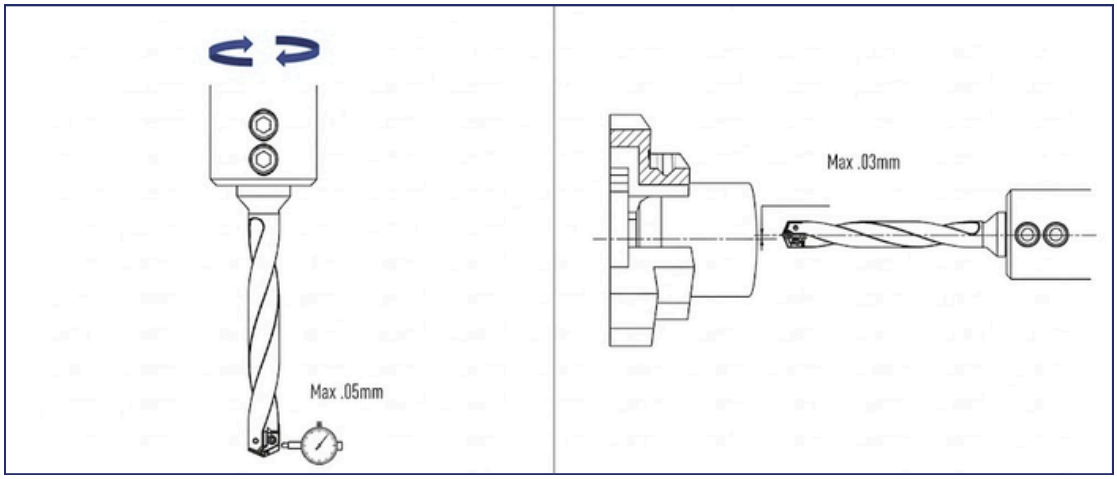

COOLING PRESSURE

INTERNAL COOLING	EXTERNAL COOLING	QUASI-DRY CUTTING

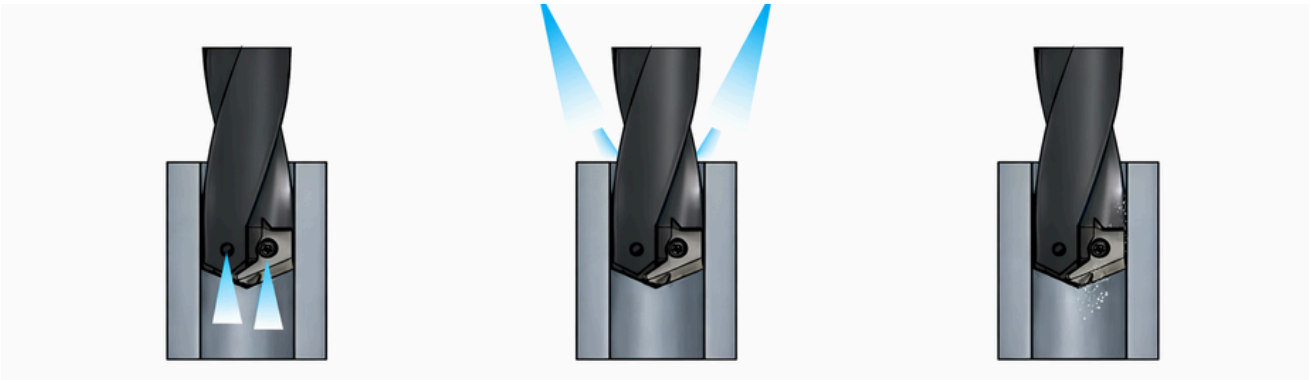

INTERNAL COOLING	EXTERNAL COOLING	QUASI-DRY CUTTING
<30 : 5bar ✓	<20 : 5bar ✓	<30 : MQL ✓
40 : 10bar ✓	40 : 10bar X	
50 : 15bar ✓	50 : 15bar X	
>60 : 20bar ✓	>60 : 20bar X	

NAMOH TOOLINGS

WE LISTEN WE INNOVATE

STANDARD OF DRILL BIT REPLACEMENT

• WEAR LIMIT

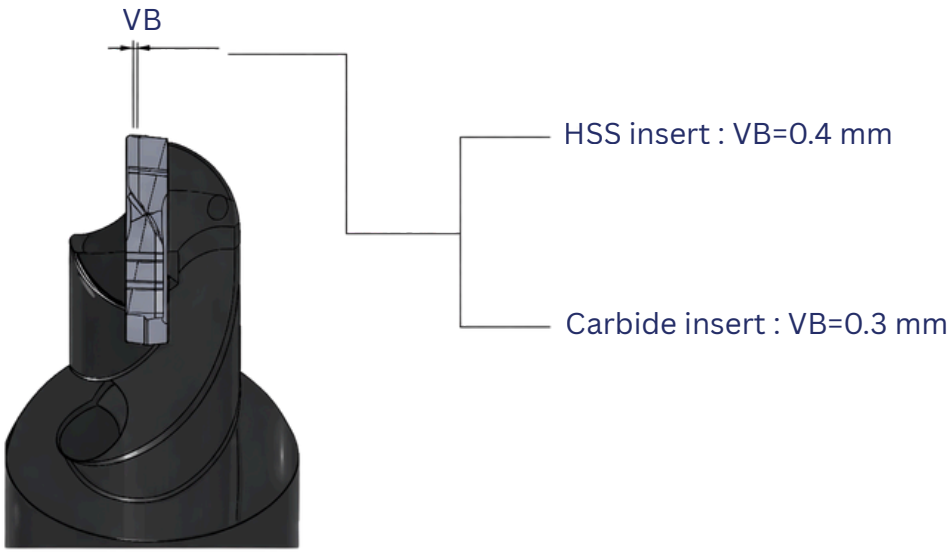

• APPLICATION

OPERATING CONDITION	INSTRUCTIONS	OPERATING CONDITION	INSTRUCTIONS
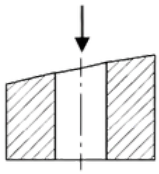	THE ENTRY SURFACE IS SLANTED SLOPE < 3° FEED RATE 50%	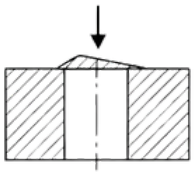	THE ENTRY SURFACE IS SLANTED Level it through spot facing before machining.
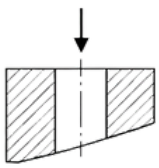	THE OUTLET IS SLANTED SLOPE < 3° FEED RATE 50%	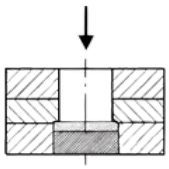	STACKED PLATES The workpiece shall be properly clamped
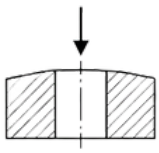	THE ENTRY SURFACE IS ARC Drilling at the center at reduced feed rate is allowed. Spot facing is required if the entry point is not at the center of the arc.	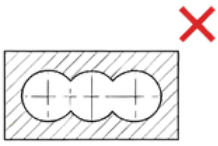	DRILL INCOMPELETE HOLE NOT ALLOWED
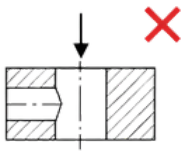	THROUGH HOLE NOT ALLOWED	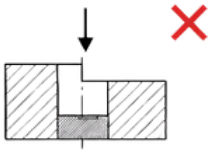	STEP ON THE ENTRY SURFACE NOT ALLOWED (THE ENTRY POINT MUST BE ON A HORIZONTAL PLANE)

NAMOH TOOLINGS
WE LISTEN WE INNOVATE

APPLICATION

- **PRECAUTIONS: Drilling process for holders with long drilling depth (50 & 70 & 90)**

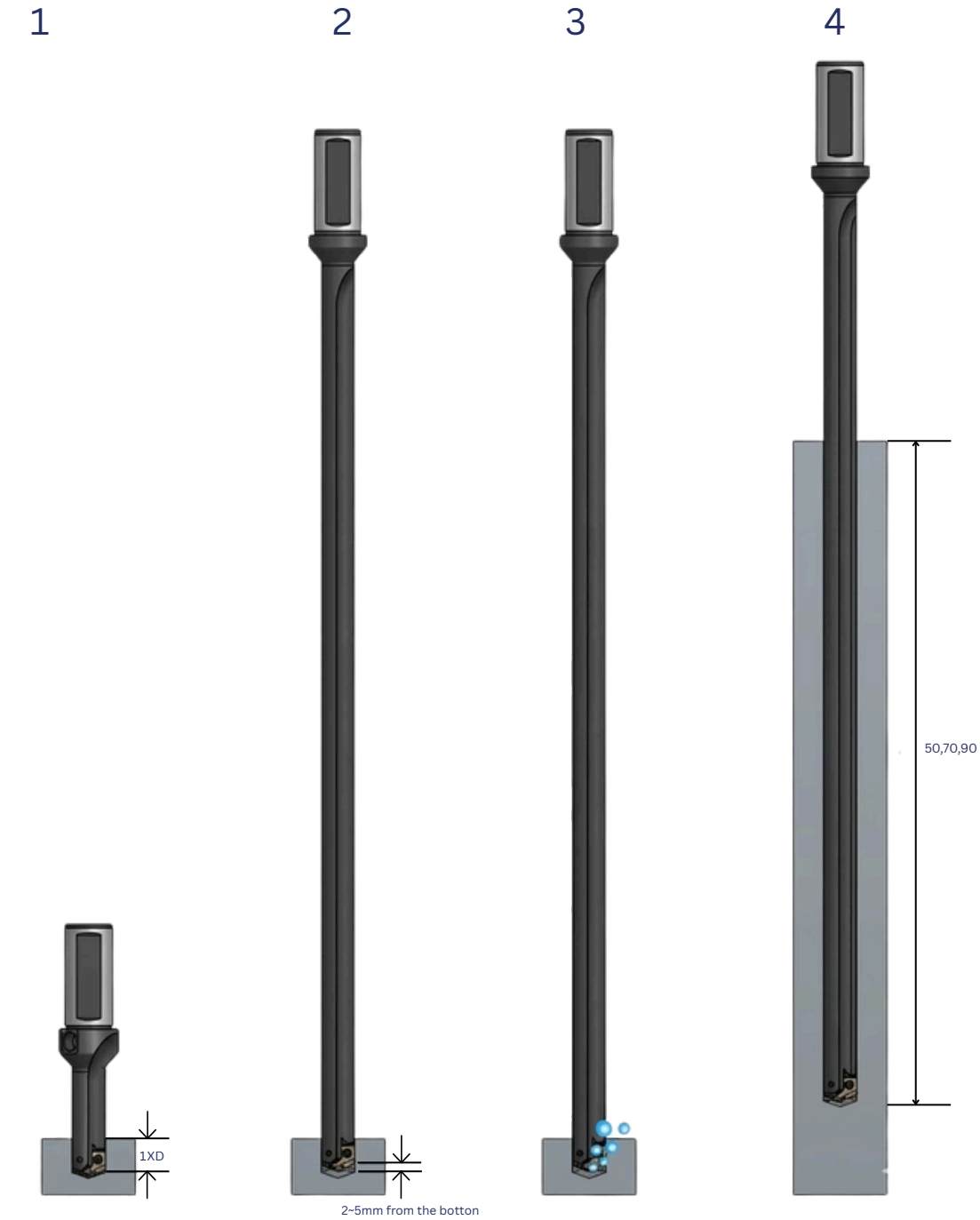

Drill a pilot hole to 1D to 1.5D with a short drill bit

Enter the pilot hole at a low speed and low feed rate

Keep the coolant for 2 to 3 s

Carry out continuouSpeed dirlling according to the recommended parameters. Reduce the speed and feed.

NAMOH TOOLINGS

WE LISTEN WE INNOVATE

NAMOH TOOLINGS
K-237,PHASE VIII, FOCAL POINT
LUDHIANA-141010 (PUNJAB)
+91 78883-32031

@Namoh_toolings
/company/namoh-toolings
sales@namohtoolings.in
www.namohtoolings.com